Component Identifiers (CID[1]) Module Identifier (MID[2]) Electronic Transmission/Chassis Control System (MID No. 027)	
CID	Component
0041	8V DC Sensor Power Supply
0070	Parking Brake Switch
0096	Fuel Level Sensor
0144	Backup Alarm Relay
0168	Electrical System Voltage
0177	Transmission Oil Temperature Sensor
0247	SAE J1939 Data Link
0248	Cat Data Link
0262	5 Volt Sensor DC Power Supply
0420	Secondary Steering Relay
0444	Starter Motor Relay
0573	Inching Pedal Position Sensor
0585	Transmission Output Speed Sensor 1
0588	Monitoring System Display
0590	Engine ECM
0596	Implement ECM
0615	Machine Articulation Angle Position
0621	Downshift Switch
0622	Upshift Switch
0623	Directional Switch
0627	Park Brake Pressure Switch
0669	Transmission Input Speed Sensor
0673	Transmission Output Speed Sensor 3
0674	Transmission Intermediate Speed Sensor 1
0675	Transmission Intermediate Speed Sensor 2
0681	Parking Brake Solenoid Valve
0967	Machine Application
1326	Location Code
1401	Transmission Clutch Solenoid 1
1402	Transmission Clutch Solenoid 2
1403	Transmission Clutch Solenoid 3
1404	Transmission Clutch Solenoid 4
1405	Transmission Clutch Solenoid 5
1406	Transmission Clutch Solenoid 6
1407	Transmission Clutch Solenoid 7
1408	Transmission Clutch Solenoid 8
1471	Steering Control Position Sensor 1
1472	Steering Control Position Sensor 2
1473	Steering Control Position Sensor 3
1482	10 Volt Sensor DC Power Supply
1484	Inching Pedal Switch
1674	Solenoid Return 1
1960	Ignition Key Reader
1961	Service Brake Accumulator Pressure
2113	Operator Present Switch
2175	Secondary Steer Left Solenoid
2176	Secondary Steer Right Solenoid
2199	Secondary Steering Request Signal Line From Implement ECM
2200	Left Steering Cylinder Position Sensor
2201	Right Steering Cylinder Position Sensor
2252	Machine Articulation Angle Sensor 2
2304	Differential Lock Relay
Engine Control System (MID No. 036)	
CID	Component
0001	Cylinder Injector #1
0002	Cylinder Injector #2
0003	Cylinder Injector #3
0004	Cylinder Injector #4
0005	Cylinder Injector #5
0006	Cylinder Injector #6
0041	8 Volt DC Supply
0091	Throttle Position Sensor
0094	Fuel Delivery Pressure Sensor
0100	Engine Oil Pressure Sensor
0110	Engine Coolant Temperature Sensor
0168	Electrical System Voltage
0172	Intake Manifold Air Temperature Sensor
0174	Fuel Temperature Sensor
0190	Engine Speed Sensor
0253	Personality Module
0261	Engine Timing
0262	5 Volt Sensor DC Power Supply
0267	Remote Shutdown
0268	Programmed Parameter
0269	Sensor Power Supply
0274	Atmospheric Pressure Sensor
0291	Engine Cooling Fan
0296	Transmission Control
0297	All Wheel Drive Control
0342	Secondary Engine Speed Sensor
0549	Throttle Lock Switch
0588	Monitoring System Display
0596	Implement Control
0791	Compression Brake Low/High Solenoid
0792	Compression Brake Medium/High Solenoid
1551	Cooling Fan Calibrate
1589	Turbocharger Inlet Air Pressure Sensor
1627	Fuel Pump Relay
1639	Machine Security System Module
1785	Intake Manifold pressure Sensor
2417	Ether Injection Control Solenoid
2770	Throttle Lock Resume/Decel Switch
2771	Throttle Lock Set/Accel Switch
Electronic Implement Control (MID No. 082) Electronic Implement Control 2 (Mid No. 147)	
CID	Component
0041	8 VDC Sensor Power Supply
0168	Electrical System Voltage
0247	SAE J1939 Data Link
0248	Cat Data Link
0262	5 Volt Sensor DC Power Supply
0296	Transmission / Chassis ECM
0358	Implement Pilot Pressure Supply Solenoid
0490	Hydraulic Lockout Switch
0588	Monitoring System Display
0590	Engine Electronic Control Module
0597	Main Hydraulic Pump Discharge Pressure
0600	Hydraulic Oil Temperature Sensor
0615	Machine Articulation Angle Position Sensor
0967	Machine Application
1326	Location Code
1471	Steering Control Position Sensor 1
1472	Steering Control Position Sensor 2
1473	Steering Control Position Sensor 3
1482	10 Volt Sensor DC Power Supply
1558	Electrical Implement Control 2
2113	Operator Present Switch
2143	Electronic Implement Control 3
2146	Articulation Lever Position Sensor
2147	Automatic Neutral Articulation Switch
2150	Blade Left Lift Lever Position Sensor
2151	Blade Right Lift Lever Position Sensor
2152	Wheel Lean Control Position Sensor
2153	Blade Pitch Control Position Sensor
2154	Blade Sideshift Lever Position Sensor
2155	Circle Drive Lever Position Sensor
2156	Circle Sideshift Control Position Sensor
2160	Blade Left Raise Solenoid Valve
2161	Blade Right Raise Solenoid Valve
2162	Blade Left Lower Solenoid Valve
2163	Blade Right Lower Solenoid Valve
2165	Blade Sideshift Left Solenoid Valve
2166	Blade Sideshift Right Solenoid Valve
2167	Circle Left Solenoid Valve
2168	Circle Right Solenoid Valve
2169	Circle Sideshift Left Solenoid Valve
2170	Circle Sideshift Right Solenoid Valve
2171	Articulation Left Solenoid Valve
2172	Articulation Right Solenoid Valve
2173	Wheel Lean Left Solenoid Valve
2174	Wheel Lean Right Solenoid Valve
2181	Blade Pitch Forward Solenoid Valve
2182	Blade Pitch Backward Solenoid Valve
2200	Left Steering Cylinder Position Sensor
2201	Right Steering Cylinder Position Sensor
2202	Steering Valve Control Module
2203	Steering Valve Control Module Spool Position Sensor
2204	Auxiliary Lever 1 Position Sensor
2205	Auxiliary Lever 2 Position Sensor
2206	Auxiliary Lever 3 Position Sensor
2207	Auxiliary Lever 4 Position Sensor
2208	Auxiliary Lever 5 Position Sensor
2209	Auxiliary Lever 6 Position Sensor
2210	Auxiliary Lever 7 Position Sensor
2211	Auxiliary Valve 1 - Port B Solenoid
2212	Auxiliary Valve 1 - Port A Solenoid
2213	Auxiliary Valve 2 - Port B Solenoid
2214	Auxiliary Valve 2 - Port A Solenoid
2215	Auxiliary Valve 3 - Port B Solenoid
2216	Auxiliary Valve 3 - Port A Solenoid
2217	Auxiliary Valve 4 - Port B Solenoid
2218	Auxiliary Valve 4 - Port A Solenoid
2219	Auxiliary Valve 5 - Port B Solenoid
2220	Auxiliary Valve 5 - Port A Solenoid
2221	Auxiliary Valve 6 - Port B Solenoid
2222	Auxiliary Valve 6 - Port A Solenoid
2223	Auxiliary Valve 7 - Port B Solenoid
2224	Auxiliary Valve 7 - Port A Solenoid
2252	Machine Articulation Angle Sensor 2
2650	Steering Valve Control Module Power Supply

[1] The CID is a diagnostic code that indicates which circuit is faulty.

[2] The MID is a diagnostic code that indicates which electronic control module diagnosed the fault.

Failure Mode Identifiers (FMI)[1]	
FMI No.	Failure Description
0	Data valid but above normal operational range.
1	Data valid but below normal operational range.
2	Data erratic, intermittent, or incorrect.
3	Voltage above normal or shorted high.
4	Voltage below normal or shorted low.
5	Current below normal or open circuit.
6	Current above normal or grounded circuit.
7	Mechanical system not responding properly.
8	Abnormal frequency, pulse width, or period.
9	Abnormal update.
10	Abnormal rate of change.
11	Failure mode not identifiable.
12	Bad device or component.
13	Out of calibration.
14	Parameter failures.
15	Parameter failures.
16	Parameter not available.
17	Module not responding.
18	Sensor supply fault.
19	Condition not met.
20	Parameter failures.

[1] The FMI is a diagnostic code that indicates what type of failure has occurred.

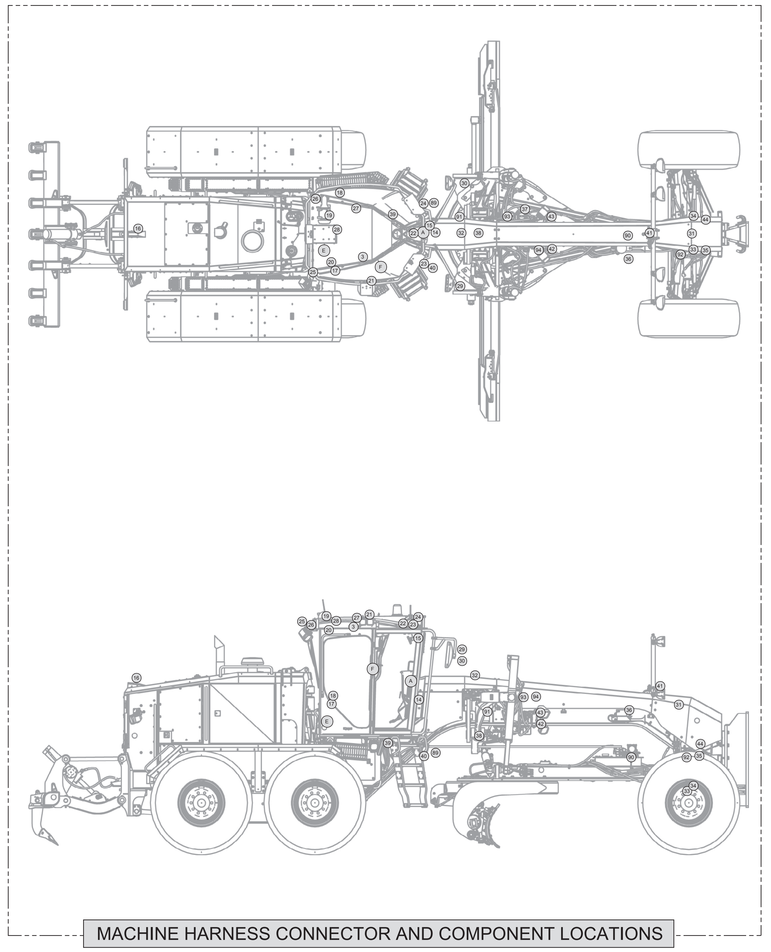
Wire Description					
Wire Number	Wire Color	Description	Wire Number	Wire Color	Description
Power Circuits			Control Circuits (Continued)		
101	RD	Battery +24V	J769	YL	Right Side Auto/Manual SW (NC)
103	RD	LH Position Lamps Fuse	J771	BU	Left Side Auto/Manual SW (NC)
104	RD	RH Position Lamps Fuse	K722	YL	RT In/Dec SW (Dec)
105	RD	Key Switch Fuse	K723	PU	RT In/Dec SW (Inc)
106	WH	Cab Work Lamps	K737	BR	Engine Brake Cylinders 1 to 4
108	RD	Dome Lamps	K738	GN	Engine Brake Cylinders 5 & 6
109	RD	Alternator Breaker	K739	BU	Engine Brake Cylinder Common
112	PU	Main Power Relay Output	K748	OR	Secondary Steer Motor Relay
114	RD	Warning Horn (Forward)	K749	WH	Blade Right Lever Pos Sensor
115	RD	Load Breaker	K750	PU	Blade Left Lever Pos Sensor
116	BR	Beacon	K758	BU	Articulation Lever Pos Sensor
117	RD	Main Breaker	K788	GY	Articulation Right Solenoid
118	GY	LH Door Wipers	K789	YL	Articulation Left Solenoid
119	PK	RH Door Wipers	L730	OR	+5V Supply (XMSN Cont)
120	YL	Front / Rear Wipers	L731	BR	5V Return (XMSN Cont)
121	YL	Back Alarm To Lamp	M719	GN	Blade Sideshift Left Pos Sensor
122	BU	Side Wiper	M720	BU	Circle Sideshift Left Solenoid
123	WH	Rear Work Lights	M722	OR	Circle Sideshift Right Solenoid
124	GN	HVAC	N707	PU	Fuel Pressure SW Return
125	RD	Back Light	N787	BU	Hydraulic Filter Bypass Switch Pilot Supply
126	RD	Transmission Control Fuse	N788	PK	Not Used
127	RD	Monitoring	R733	BR	Hydraulic Oil Inlet Temp Sensor
128	PK	Autolube	R736	PK	Park Brake Press SW (NO)
129	RD	Cigar Lighter	R746	PK	Intake Manifold Press Sensor
130	GN	Waves	R747	GY	Atmospheric Pressure Sensor
132	RD	Condenser Fan #1	T725	WH	Fuel Pressure SW
134	RD	Air Cleaner	U700	WH	Circle Rt Sol
135	RD	Condenser Fan #2	U701	GN	Circle Lt Sol
140	BU	Fast Speed Blower Breaker	U702	GY	Aux Valve 1 Sol B
141	PK	Defrost Fan	U703	YL	Aux Valve 1 Sol A
142	BU	Flasher	U704	PK	Aux Valve 2 Sol B
143	BR	Blade Work Lights	U705	PU	Aux Valve 2 Sol A
144	GN	Seat	U706	BR	Aux Lever 1 Pos Sensor
146	GY	Blade Work Light #2	U707	BU	Aux Lever 2 Pos Sensor
160	RD	Engine Control Fuse	U708	OR	Aux Lever 3 Pos Sensor
152	RD	AccuGrade Fuse	U709	WH	Aux Lever 4 Pos Sensor
155	RD	AWD Control (Not used 14M)	U710	GN	Aux Lever 5 Pos Sensor
156	YL	Sensor Power	U711	GY	Aux Lever 6 Pos Sensor
160	PU	Heated Mirrors	U712	YL	Aux Lever 7 Pos Sensor
165	YL	Differential Lock	U713	PK	Aux Valve 3 Sol B
169	PK	Center Shift / Blade Cushion	U714	PU	Aux Valve 3 Sol A
170	RD	Product Link	U715	BR	Aux Valve 4 Sol B
171	RD	Implement Control #1	U716	BU	Aux Valve 4 Sol A
172	RD	Implement Control #2	U717	OR	Aux Valve 5 Sol B
176	RD	Communication Radio Converter	U718	WH	Aux Valve 5 Sol A
179	RD	Entertainment Radio Converter	U719	GN	Aux Valve 6 Sol B
180	RD	Implement Control Main	U720	GY	Aux Valve 6 Sol A
199	RD	Steering Valve	U723	PU	Fuel Level Sender
Ground Circuits			U724	WH	XMSN Filter Bypass SW
200	BK	Main Chassis	U725	GN	Auto Shift SW (NC)
210	BK	Ent Radio Converter Output (24/12 Volt)	U726	GY	Auto Shift SW (NO)
229	BK	Engine Control Gnd	U727	WH	Inching Pedal (NO)
A201	BK	Not Used	U728	PK	Serv Brake Accum Charge Press Sensor
A202	BK	Trans & Chassis Control	U734	GN	Park Brake SW (Off)
A210	BK	Not Used	U735	GY	Park Brake SW(On)
A250	BK	Cab Gnd	U736	YL	Steering Valve Signal
A274	BK	AccuGrade Gnd	U739	BR	Steering Lever Pos 1
A295	BK	Implement Control Ground	U740	BU	Steering Lever Pos 2
A296	BK	Implement 1 Control Ground	U741	OR	Steering Lever Pos 3
A297	BK	Implement 2 Control Ground	U742	WH	Steer Valve Error Signal
Basic Machine Circuits			U743	GY	Wheel Lean Input Pos Sensor
304	WH	Cranking Motor	U744	OR	Auto Neutral Art Sw (NO)
306	GN	Starter Motor Relay Output	U745	PK	Auto Neutral Art Sw (NC)
307	OR	Key Switch Start	U747	OR	Wheel Lean Sol Left
308	YL	Main Power Relay Coil	U748	GY	Wheel Lean Sol Right
320	OR	Horn Relay Coil To Switch	U749	BR	Blade Sideshift Sol Right
321	BR	Backup Alarm	U750	PK	Blade Sideshift Sol Left
322	GY	Warning Horn (Forward)	U751	WH	Blade Pitch Sol Fwd
365	YL	Fuel Priming Pump Relay	U752	BU	Blade Pitch Sol Reverse
Monitoring Circuits			U753	BR	Sec Steer Request Sig
403	GN	Alternator (r) Term.	U760	PK	Optional Float Ind 1
439	YL	Center Shift Pin Pulled Indicator	U761	PU	Optional Float Ind 4
C491	PU	Park Brake Pressure SW (NC)	U762	GN	Optional Float Ind 6
F421	YL	Fuel Supply Temp.	U763	BU	Circle Drive Lever Pos Sensor
G434	BU	Not Used	U764	GY	Blade Pitch Input Pos Sensor
H414	YL	Actor Alarm	U765	WH	Circle Sideshift P Pos Sensor
Accessory Circuits			U766	BR	Op Seat Sw (NO)
500	BR	Wiper - Front (Park)	U767	BU	Op Seat Sw (NC)
501	GN	Wiper - Front (Low)	U768	BU	Art Angle Pos Sensor 2
502	OR	Wiper - Front (Hi)	U769	OR	Aux Valve 7 Sol B
503	BR	Wiper - Rear (Park)	U770	WH	Aux Valve 7 Sol A
504	YL	Wiper - Rear (Low)	X725	GY	Steering Signal To Controller
505	BU	Wiper - Rear (Hi)	X754	GN	Sec Steer Left Solenoid
506	PU	Washer - Front	X755	WH	Sec Steer Right Solenoid
507	WH	Washer - Rear	Y787	YL	PHS Can (+) (Not Used)
508	PU	Radio Speaker - Left	Y788	GN	PHS Can (-) (Not Used)
509	WH	Radio Speaker - Left (Common)	801	PK	Autolube Solenoid & Pump Motor
511	BR	Radio Speaker - Right	843	WH	Not Used
512	GN	Radio Speaker - Right (Common)	844	GN	Not Used
515	GY	Blower Motor (Hi)	849	YL	Not Used
516	GN	Blower Motor (Medium)	850	PU	Not Used
517	BU	Blower Motor (Low)	892	BR	Cat Data Link (-)
518	OR	+24V Flasher Input	893	GN	Cat Data Link (+)
519	PK	Thermostat To Refrigerant Press. SW	A847	YL	Left Blade Down Force Pro Valve
520	WH	Opr A/C SW To Thermostat	A849	OR	Right Blade Down Force Pro Valve
521	YL	A/C SW To Refrigerant SW	A853	OR	Fuel Prime SW To Fuel Prime Pump
522	WH	A/C Clutch To Thermostat SW	F843	YL	Inching Pedal Pos Sensor
523	BR	Wiper - Left (Park)	F846	PU	MSS Status LED
524	BU	Wiper - Left (Low)	G826	WH	Fuel Press Sensor (+5V)
525	GY	Wiper - Left (Hi)	G827	GN	Fuel Press Sensor (Gnd)
526	YL	Wiper - Right (Park)	G828	WH	+5V Supply 1 (Eng Cont)
527	GN	Wiper - Right (Low)	G829	GN	5V Return (Eng Cont)
528	PK	Wiper - Right (Hi)	G833	PK	Temp Sensor Return
529	WH	Washer Left	G856	WH	TDC Service Probe (+)
530	OR	Washer Right	G857	YL	TDC Service Probe (-)
538	BR	Dash Flasher Indicator Output	H803	BU	Proportional Driver Return (8-12) (Inp.Cont1)
539	BU	Turn Signal Indicator Right	H807	YL	Load Return 1 (Inp Cont)
540	WH	Turn Signal Indicator Left	H808	WH	Load Return 1 (Inp Cont2)
556	WH	Differential Lock	H861	PU	Proportional Driver Return (1-4) (Inp Cont)
567	WH	A/C SW To Condenser Fan Relays	H862	GY	Proportional Driver Return (5-8) (Inp.Cont)
570	BU	Blade Cushion Sol	H863	BU	Proportional Driver Return (9-12) (Inp.Cont)
581	GY	Left Rear Turn Flasher	H864	GN	Not Used
582	PK	Right Rear Turn Flasher	J844	GY	+8 Volt Supply (Eng Cont)
592	BU	Dc/Dc Converter Power Output	K831	GY	LH Down Force Enable Solenoid
593	GN	Condenser Fan Relay To Motors	K832	OR	RH Down Force Enable Solenoid
A504	GN	Rear Defroster Fan (Low)	L854	YL	AccuGrade Can (+)
A507	YL	Rear Defroster Fan (Hi)	L855	GN	AccuGrade Can (-)
A513	PK	Dc/Dc Converter Memory Output	R805	OR	+8V Sensor Power (Imp Cont)
A514	YL	Heated Mirror Power	R818	YL	Transmission Oil Temp Sensor
A524	BR	Temp Potentiometer Pos 2	T858	GY	Injector 1 & 2 High Side
A557	WH	Precleaner Blower +B	T859	WH	Injector 3 & 4 High Side
A572	PK	Comm Converter 12V Output	T860	OR	Injector 5 & 6 High Side
C532	GN	Autolube Pressure Sensor Signal	X800	OR	+8V Sensor Return (XMSN Cont)
C542	GN	Heated Mirror Power	900	PU	XMSN Shift Sol 4
C546	WH	Blower Fast Speed Relay	901	WH	XMSN Shift Sol 6
C558	BU	Condenser Fan 2 Relay Out	902	BR	XMSN Shift Sol 7
C568	WH	Blower Motor (Max)	903	GY	XMSN Shift Sol 8
E529	YL	Power Air Cleaner Relay Coil	921	WH	XMSN Sol Return
E554	PK	A/C Cont To A/C Comp Clutch	922	BR	XMSN Sol Return
Lighting Circuits			925	YL	XMSN Sol Shift 1
603	PK	Rotary Beacon	994	GY	Engine Oil Pressure Sensor
604	OR	Stop Lamp	995	BU	Engine Coolant Temperature
605	YL	Turn Lamp - Left	997	OR	Analog Sensor Power (+ 5V)(Imp.Cont)
606	GY	Turn Lamp - Right	998	BR	5V Return (Imp Cont)
607	PK	Blade Floods #2	A975	BU	Differential Lock Relay
609	YL	Snow Wing Lamps	C067	BU	Intake Manifold Air Temp
610	OR	Head Lamp Relay Out	C978	BR	Set Throttle SW (NC)
611	PU	Head Lamp Hi	C979	OR	Resume Throttle SW (NO)
614	PU	Backlight Relay Input	C981	GN	Compression Brake
617	BR	Tail/Position Lamp - Left	C991	PK	Fuel Pressure Sensor
618	YL	Tail/Position Lamp - Right	E900	WH	XMNS Output Sol (-)
619	GN	Head Lamp Lo	E901	GN	XMNS Output Sol (+)
626	BU	Backlight Relay Out	E902	PU	XMNS Intermediate Spd (-)
645	PK	Headlamp Relay Coil	E903	YL	XMNS Intermediate Spd (+)
646	OR	Rear Flood Relay Coil	E904	BR	XMNS Intermediate Spd (-)
647	GN	Blade Flood Relay Coil	E905	BU	XMNS Intermediate Spd (+)
660	PU	Ind Lamp - Auto Shift 1st Gear	E906	OR	XMNS Trans Output Spd (-)
668	BU	Backlight Relay Out	E907	GY	XMNS Trans Output Spd (+)
680	GN	Cab Floodlights Relay Out	E908	BR	XMNS Trans Input Spd (-)
683	PU	Rear Flood Relay Out	E909	WH	XMNS Trans Input Spd (+)
684	OR	Cab Flood Relay Input	E929	GY	Articulation Angle Pos Sensor
685	BR	Blade Floods	E963	BK	Engine Speed Sensor (-)
695	OR	Left Turn Lamp Relay Coil	E964	WH	Engine Speed Sensor (+)
696	GN	Right Turn Lamp Relay Coil	E965	BU	Sec Engine Speed Sensor (-)
A608	GY	Dimmer Relay Coil	E966	YL	Sec Engine Speed Sensor (+)
Control Circuits			E974	GN	Inching Pedal SW (NC)
709	OR	+10V Supply (Imp Cont)	F916	GN	Backup Alarm Relay
727	GN	Sec Steer Test SW	G946	OR	Throttle Sat SW (NO)
751	ON	XMSN Shift Sol 3	G953	BU	Impl Pilot Supply Solenoid
752	YL	XMSN Shift Sol 2	G965	PU	Load Return 2 (Imp Cont)
754	BU	XMSN Shift Sol 1	K900	YL	J1939 Data Link +
755	OR	XMSN Shift Sol 5	K927	BU	PWM Driver Return (5-8) (Imp Cont1)
799	WH	+10V Supply (XMSN Cont)	K952	BR	PWM Driver Return (1-4) (Imp Cont1)

Component Location - Volume 1 (Cab / Chassis)					
Component	Schematic Location	Machine Location	Component	Schematic Location	Machine Location
Camera - Rear Vision	B-12	16	Solenoid - Auxiliary Valve 5 Solenoid A	D-6	31
Coil - MSS Exciter	C-11	A	Solenoid - Auxiliary Valve 5 Solenoid B	D-6	31
Control - Product Link 300	I-9	28	Solenoid - Auxiliary Valve 6 Solenoid A	C-6	32
Control - Implement 3	I-13	E	Solenoid - Auxiliary Valve 6 Solenoid B	C-6	32
Ground - Cab 1	H-14	E	Solenoid - Blade Left Lower	F-4	32
Ground - Front Frame 1	F-8	14	Solenoid - Blade Left Raise	F-4	32
Horn - Air	I-2	36	Solenoid - Blade Pitch Backward	G-4	31
Horn - Forward (High)	G-3	35	Solenoid - Blade Pitch Forward	G-4	31
Key Reader - MSS	C-11	A	Solenoid - Blade Right Lower	F-4	32
LED - MSS Status	C-11	A	Solenoid - Blade Right Raise	F-4	32
Mirror - LH Heated	F-9	30	Solenoid - Blade Side Shift Left	G-4	31
Mirror - RH Heated	E-9	29	Solenoid - Blade Side Shift Right	H-4	31
Module - Steering Control Valve	H-3	32	Solenoid - Centershift Pin Puller	I-4	38
Monitor - Rear Vision	B-10	15	Solenoid - Circle Left	H-4	31
Motor - Air Cleaner	D-9	19	Solenoid - Circle Right	H-4	31
Motor - Autolube Pump	E-2	90	Solenoid - Circle Side Shift Left	G-4	31
Motor - LH Side Wiper	B-13	18	Solenoid - Circle Side Shift Right	G-4	31
Motor - RH Side Wiper	A-13	17	Solenoid - L Blade Down Force Cont	D-3	93
Radio - Gen 2	I-10	28	Solenoid - L Blade Down Force Op	D-3	93
Resistor - Steer Valve Pull-Up	G-3	32	Solenoid - LH Blade Cushion	D-3	37
Sensor - Autolube Pressure	H-3	91	Solenoid - R Blade Down Force Cont	D-3	94
Sensor - Left Steer Cylinder Position	G-2	34	Solenoid - R Blade Down Force Op	D-3	94
Sensor - Right Steer Cylinder Position	F-2	33	Solenoid - RH Blade Cushion	D-3	37
Solenoid - Articulate Left	F-4	32	Solenoid - Secondary Steering Left	E-4	32
Solenoid - Articulate Right	E-4	32	Solenoid - Secondary Steering Right	E-4	32
Solenoid - Autolube	E-2	90	Solenoid - Wheel Lean Left	H-4	31
Solenoid - Auxiliary Valve 1 Solenoid A	H-4	31	Solenoid - Wheel Lean Right	H-4	31
Solenoid - Auxiliary Valve 1 Solenoid B	I-4	31	Switch - Beacon	C-13	F
Solenoid - Auxiliary Valve 2 Solenoid A	E-4	32	Switch - Cab Flood Lamp	D-13	F
Solenoid - Auxiliary Valve 2 Solenoid B	E-4	32	Switch - Center Shift Pin Puller	I-4	38
Solenoid - Auxiliary Valve 3 Solenoid A	C-6	31	Switch - Dimmer	D-13	F
Solenoid - Auxiliary Valve 3 Solenoid B	C-6	31	Switch - Floodlamps	D-13	F
Solenoid - Auxiliary Valve 4 Solenoid A	C-6	32	Switch - Snow Wing Flood	C-13	F
Solenoid - Auxiliary Valve 4 Solenoid B	C-6	32			

Check Part Numbers in the Parts Manuals for your Specific Machine.
Machine locations are repeated for components located close together.
A = Located below or inside of dash.
E = Located inside rear covered compartment.
F = Located on right hand cab column.

Resistor, Sender and Solenoid Specifications - Volume 1			
Part No.	Component Description		Resistance (Ohms)*
152-8346	Solenoid:	Center Shift Pin Puller	32.6 ± 25
240-7193	Resistor:	Steer Valve Pull -Up	500 ± 25
254-3414	Solenoid:	Secondary Steer Left & Right	2.2 ± 0.2
278-1799	Solenoid:	Auxiliary Valve 1 thru 6 Articulate LT / RT Blade Left Raise / Lower Blade Right Raise / Lower Blade Pitch Forward / Backward Blade Sideshift LT / RT Circle Left / Right Circle Side Shift LT / RT Left & Right Blade Down Force Control Left & Right Down Force Op Wheel Lean Lt / RT	8.7 ± 0.4

* At room temperature unless otherwise noted.



Connector Location - Volume 1		
Connector Number	Schematic Location	Machine Location
CONN 1	B-15	E
CONN 2	D-15	E
CONN 3	D-15	E
CONN 4	F-15	E
CONN 5	D-6 , G-15	14
CONN 6	I-15	E
CONN 7	C-12	A
CONN 8	E-12	3
CONN 9	F-12	3
CONN 10	G-11	20
CONN 11	D-9	21
CONN 12	D-9	21
CONN 13	E-9	22
CONN 14	E-9	21
CONN 15	E-9	22
CONN 16	E-9	23
CONN 17	E-9	23
CONN 18	E-9	25
CONN 19	F-9	26
CONN 20	F-9	24
CONN 21	F-9	24
CONN 22	F-9	22
CONN 23	F-9	27
CONN 24	G-8	14
CONN 25	H-8	14
CONN 26	D-5	93
CONN 27	F-3	92
CONN 28	F-3	35
CONN 29	F-3	39
CONN 30	F-3	40
CONN 31	F-3	42
CONN 32	G-8	A
CONN 33	F-3	35
CONN 34	G-3	35
CONN 35	G-2 , H-2	41
CONN 36	G-2 , H-2	41
CONN 82	I-3	E
CONN 83	I-3	44
CONN 84	I-3	39
CONN 85	I-3	35
CONN 86	I-3	89
CONN 87	I-3	43

The connectors shown in this chart are for harness to harness connectors. Connectors that join a harness to a component are generally located at or near the component. See the Component Location Chart.

Event Codes Engine Control	
Event Code	Condition
E096	Fuel Pressure Is High
E172	Inlet Air Is Restricted
E194	Exhaust Temperature Is High
E265	Shutdown (Ground Level)
E360	Oil Pressure Is Low
E361	Coolant Temperature Is High
E362	Engine Overspeeds
E363	Fuel Temperature Is High
E390	Fuel Filter Is Restricted
E441	Idle Speed Is High
E539	Intake Manifold Air Temperature Is High
Transmission / Chassis Control	
Event Code	Condition
0284	Low Brake Pressure
0329	Transmission Filter Plugged
0490	Parking Brake ON
0627	Parking Brake Abuse
0795	Machine Speed Excessive For Machine Articulation Angle
0877	High Transmission Oil Temperature
Implement Control	
Event Code	Condition
0192	Steering System Malfunction
0256	Steering Output Detected In The Wrong Direction
0257	Steering Output Detected With No Command
0258	No Steering Detected With Command Given
0263	Low Main Pump Pressure
0455	Hydraulic Pilot Supply Filter Plugged
0560	Secondary Steer Pump No Response
0562	Steering Lever Has Not Been Aligned To Wheel Steering Angle
0598	Steering Limited Due To Cold Hydraulic Oil
0599	Gear Too High For Steering With Cold Oil
0795	Machine Speed Excessive For Articulation Angle
0796	Machine Articulation Angle Limited Due To Machine Speed
0861	Clock Manual Alignment Required
0878	High Hydraulic Oil Temperature
2065	Invalid Articulation Response Detected

Related Electrical Service Manuals	
Title	Form Number
Alternator 235-7133	SENR4133
Electric Starting Motor 207-1556	SENR3581
Engine Control	RENR9344
Implement Control	RENR9013
Transmission / Chassis Control	RENR9004

CATERPILLAR®

RENR9024-09
September 2017

Schematic

16M Motor Grader Electrical System

B9H1-750

Volume 1 of 3: Cab and Chassis

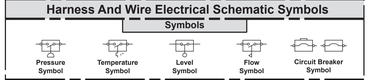
© 2017 Caterpillar, All Rights Reserved

Printed in U.S.A.

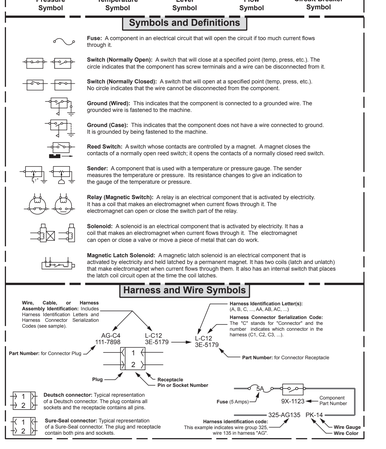
RENR9024-09 VOL 1 of 3
36 Page, (Dimensions: 48 inches x 35 inches)

Harness And Wire Electrical Schematic Symbols

Symbols

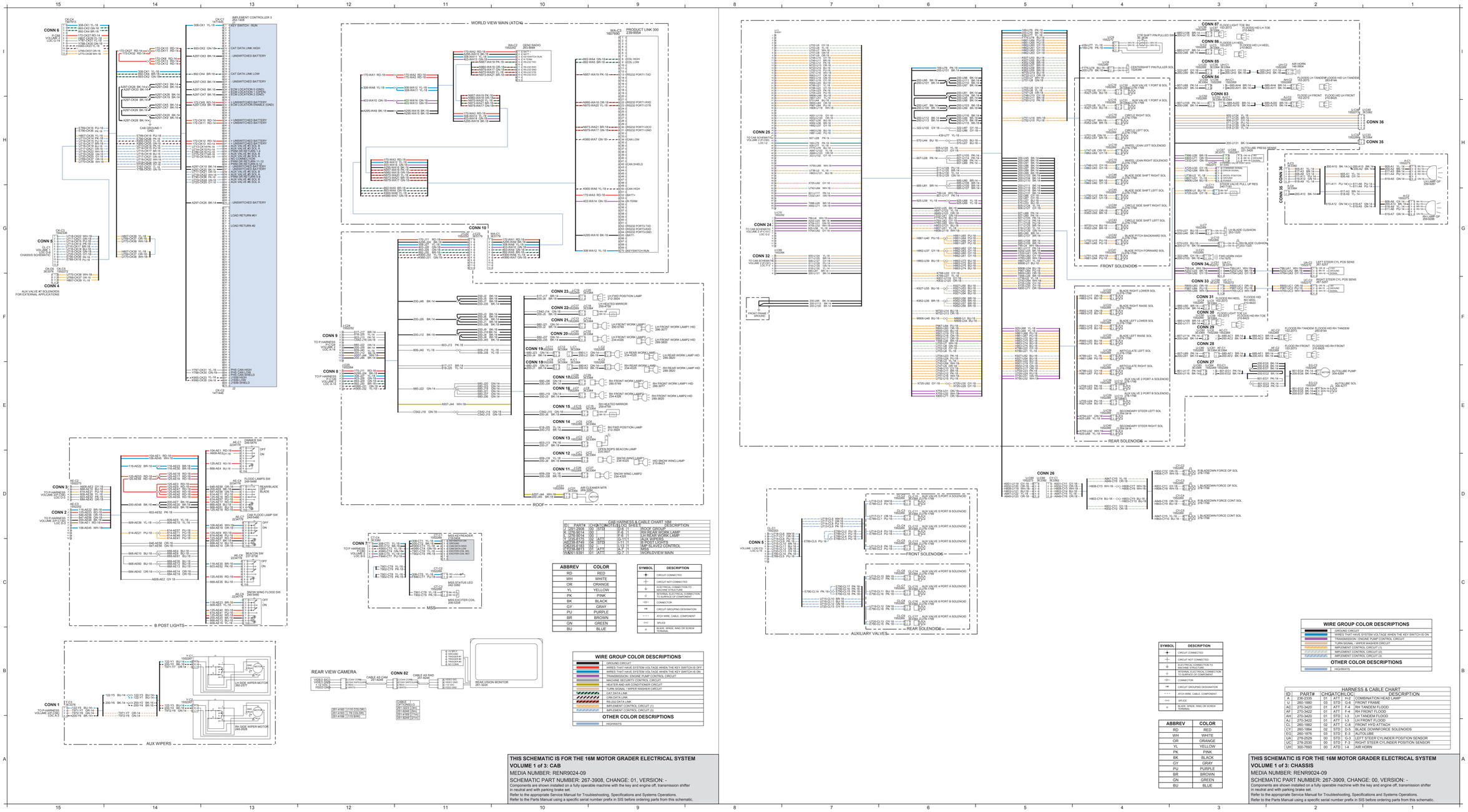


Symbols and Definitions


Fuse: A component in an electrical circuit that will open the circuit if too much current flows through it.
Switch (Normally Open): A switch that will close at a specified point (temp, press, etc.). The circle indicates that the component has screw terminals and a wire can be disconnected from it.
Switch (Normally Closed): A switch that will open at a specified point (temp, press, etc.). No circle indicates that the wire cannot be disconnected from the component.
Ground (Wired): This indicates that the component is connected to a grounded wire. The grounded wire is fastened to the machine.
Ground (Case): This indicates that the component does not have a wire connected to ground. It is grounded by being fastened to the machine.
Reed Switch: A switch whose contacts are controlled by a magnet. A magnet closes the contacts of a normally open reed switch; it opens the contacts of a normally closed reed switch.
Sender: A component that is used with a temperature or pressure gauge. The sender measures the temperature or pressure. Its resistance changes to give an indication to the gauge of the temperature or pressure.
Relay (Magnetic Switch): A relay is an electrical component that is activated by electricity. It has a coil that mak

RENR9024-09 VOL 1 of 3

36 Page, (Dimensions: 48 inches x 35 inches)



ABBREV	COLOR
RD	RED
WH	WHITE
OR	ORANGE
YL	YELLOW
PK	PINK
BK	BLACK
GY	GRAY
PU	PURPLE
BR	BROWN
GN	GREEN
BU	BLUE

SYMBOL	DESCRIPTION
+	CIRCUIT CONNECTED
+	CIRCUIT NOT CONNECTED
⏚	ELECTRICAL CONNECTION TO MACHINE STRUCTURE
⏚	INTERNAL ELECTRICAL CONNECTION TO SURFACE OF COMPONENT
⊂⊃	CONNECTOR
- - -	CIRCUIT GROUPING DESIGNATION
- - -	ATCH WIRE, CABLE, COMPONENT
⊃⊂	SPLICE
⏚	BLADE, SPADE, RING OR SCREW TERMINAL

ID	PART#	CHG	TO CHG	NOTE	BLOC	SHEET	DESCRIPTION
F	267-2908	00			9-E	1	ENGINE CONTROL
K	267-3912	00			F-2	11	RH SUPER WORK LAMP
L	267-3913	00			F-2	11	LH SUPER WORK LAMP
V	267-3719	00	ATT		G-11	1	AUX WIRING
AB	267-3747	00	STD		I-11	1	B POST LIGHTS
AC	267-3748	00			G-11	1	AUX BLADE CONTROL
CH	267-3907	01	ATT		G-7	1	WIPER
W	267-3908	01	ATT		G-7	1	WORLDVIEW MAIN

ID	PART#	CHG	TO CHG	NOTE	BLOC	SHEET	DESCRIPTION
A	236-2335	01	ATT		H-2		COMBINATION HEAD LAMP
U	260-1880	03	STD		G-6		FRONT FRAME
AC	270-3420	01	ATT		F-4		RH TANDEM FLOOD
AF	270-3422	01	ATT		F-4		RH FRONT FLOOD
AH	270-3420	01	STD		I-3		LH TANDEM FLOOD
AJ	270-3422	01	ATT		I-3		LH FRONT FLOOD
CL	260-1882	02	ATT		C-8		FRONT HYD ATTACH
DY	260-1884	02	STD		D-5		BLADE DOWNFORCE SOLENOIDS
EG	260-1876	03	STD		E-3		AUTOLUBE
UA	278-2529	00	STD		G-3		LEFT STEER CYLINDER POSITION SENSOR
UC	278-2530	00	STD		F-3		RIGHT STEER CYLINDER POSITION SENSOR
UH	300-7603	00	ATD		I-4		AIR HORN

WIRE GROUP COLOR DESCRIPTIONS
OTHER COLOR DESCRIPTIONS
THIS SCHEMATIC IS FOR THE 16M MOTOR GRADER ELECTRICAL SYSTEM
VOLUME 1 of 3: CHASSIS
MEDIA NUMBER: RENR9024-09
SCHEMATIC PART NUMBER: 267-3909, CHANGE: 00, VERSION: -
Components are shown installed on a fully operable machine with the key and engine off, transmission shifter in neutral and with parking brake set.
Refer to the appropriate Service Manual for Troubleshooting, Specifications and Systems Operations.
Refer to the Parts Manual using a specific serial number prefix in SIS before ordering parts from this schematic.

Component Identifiers (CID*) Module Identifier (MID*) Electronic Transmission/Chassis Control System (MID No. 027)	
CID	Component
0041	8V DC Sensor Power Supply
0070	Parking Brake Switch
0096	Fuel Level Sensor
0144	Backup Alarm Relay
0168	Electrical System Voltage
0177	Transmission Oil Temperature Sensor
0247	SAE J1939 Data Link
0248	Cat Data Link
0262	5 Volt Sensor DC Power Supply
0368	Transmission Auto / Manual Switch
0420	Secondary Steering Relay
0444	Starter Motor Relay
0573	Inching Pedal Position Sensor
0585	Transmission Output Speed Sensor 1
0586	Monitoring System Display
0590	Engine ECM
0596	Implement ECM
0615	Machine Articulation Angle Position
0621	Downshift Switch
0622	Upshift Switch
0623	Directional Switch
0627	Park Brake Pressure Switch
0669	Transmission Input Speed Sensor
0673	Transmission Output Speed Sensor 3
0674	Transmission Intermediate Speed Sensor 1
0675	Transmission Intermediate Speed Sensor 2
0681	Parking Brake Solenoid Valve
0967	Machine Application
1326	Location Code
1401	Transmission Clutch Solenoid 1
1402	Transmission Clutch Solenoid 2
1403	Transmission Clutch Solenoid 3
1404	Transmission Clutch Solenoid 4
1405	Transmission Clutch Solenoid 5
1406	Transmission Clutch Solenoid 6
1407	Transmission Clutch Solenoid 7
1408	Transmission Clutch Solenoid 8
1471	Steering Control Position Sensor 1
1472	Steering Control Position Sensor 2
1473	Steering Control Position Sensor 3
1482	10 Volt Sensor DC Power Supply
1484	Inching Pedal Switch
1674	Solenoid Return 1
1960	Ignition Key Reader
1961	Service Brake Accumulator Pressure
2113	Operator Present Switch
2175	Secondary Steer Left Solenoid
2176	Secondary Steer Right Solenoid
2199	Secondary Steering Request Signal Line From Implement ECM
2200	Left Steering Cylinder Position Sensor
2201	Right Steering Cylinder Position Sensor
2252	Machine Articulation Angle Sensor 2
2304	Differential Lock Relay
Engine Control System (MID No. 036)	
CID	Component
0001	Cylinder Injector #1
0002	Cylinder Injector #2
0003	Cylinder Injector #3
0004	Cylinder Injector #4
0005	Cylinder Injector #5
0006	Cylinder Injector #6
0041	8 Volt DC Supply
0091	Throttle Position Sensor
0094	Fuel Delivery Pressure Sensor
0100	Engine Oil Pressure Sensor
0110	Engine Coolant Temperature Sensor
0168	Electrical System Voltage
0172	Intake Manifold Air Temperature Sensor
0174	Fuel Temperature Sensor
0190	Engine Speed Sensor
0253	Personality Module
0261	Engine Timing
0262	5 Volt Sensor DC Power Supply
0267	Remote Shutdown
0268	Programmed Parameter
0269	Sensor Power Supply
0274	Atmospheric Pressure Sensor
0291	Engine Cooling Fan
0296	Transmission Control
0297	All Wheel Drive Control
0342	Secondary Engine Speed Sensor
0549	Throttle Lock Switch
0588	Monitoring System Display
0596	Implement Control
0791	Compression Brake Low/High Solenoid
0792	Compression Brake Medium/High Solenoid
1051	Cooling Fan Calibrate
1589	Turbocharger Inlet Air Pressure Sensor
1627	Fuel Pump Relay
1639	Machine Security System Module
1785	Intake Manifold pressure Sensor
2417	Ether Injection Control Solenoid
2770	Throttle Lock Resume/Decel Switch
2771	Throttle Lock Set/Accel Switch
Electronic Implement Control (MID No. 082) Electronic Implement Control 2 (Mid No. 147)	
CID	Component
0041	8 VDC Sensor Power Supply
0168	Electrical System Voltage
0247	SAE J1939 Data Link
0248	Cat Data Link
0262	5 Volt Sensor DC Power Supply
0296	Transmission / Chassis ECM
0358	Implement Pilot Pressure Supply Solenoid
0490	Hydraulic Lockout Switch
0588	Monitoring System Display
0590	Engine Electronic Control Module
0597	Main Hydraulic Pump Discharge Pressure
0600	Hydraulic Oil Temperature Sensor
0615	Machine Articulation Angle Position Sensor
0967	Machine Application
1326	Location Code
1471	Steering Control Position Sensor 1
1472	Steering Control Position Sensor 2
1473	Steering Control Position Sensor 3
1482	10 Volt Sensor DC Power Supply
2113	Operator Present Switch
2143	Electronic Implement Control 3
2146	Articulation Lever Position Sensor
2147	Automatic Neutral Articulation Switch
2150	Blade Left Lift Lever Position Sensor
2151	Blade Right Lift Lever Position Sensor
2152	Wheel Lean Control Position Sensor
2153	Blade Pitch Control Position Sensor
2154	Blade Sideshift Lever Position Sensor
2155	Circle Drive Lever Position Sensor
2156	Circle Sideshift Control Position Sensor
2160	Blade Left Raise Solenoid Valve
2161	Blade Right Raise Solenoid Valve
2162	Blade Left Lower Solenoid Valve
2163	Blade Right Lower Solenoid Valve
2165	Blade Sideshift Left Solenoid Valve
2166	Blade Sideshift Right Solenoid Valve
2167	Circle Left Solenoid Valve
2168	Circle Right Solenoid Valve
2169	Circle Sideshift Left Solenoid Valve
2170	Circle Sideshift Right Solenoid Valve
2171	Articulation Left Solenoid Valve
2172	Articulation Right Solenoid Valve
2173	Wheel Lean Left Solenoid Valve
2174	Wheel Lean Right Solenoid Valve
2181	Blade Pitch Forward Solenoid Valve
2182	Blade Pitch Backward Solenoid Valve
2200	Left Steering Cylinder Position Sensor
2201	Right Steering Cylinder Position Sensor
2202	Steering Valve Control Module
2203	Steering Valve Control Module Spool Position Sensor
2204	Auxiliary Lever 1 Position Sensor
2205	Auxiliary Lever 2 Position Sensor
2206	Auxiliary Lever 3 Position Sensor
2207	Auxiliary Lever 4 Position Sensor
2208	Auxiliary Lever 5 Position Sensor
2209	Auxiliary Lever 6 Position Sensor
2210	Auxiliary Lever 7 Position Sensor
2211	Auxiliary Valve 1 - Port B Solenoid
2212	Auxiliary Valve 1 - Port A Solenoid
2213	Auxiliary Valve 2 - Port B Solenoid
2214	Auxiliary Valve 2- Port A Solenoid
2215	Auxiliary Valve 3 - Port B Solenoid
2216	Auxiliary Valve 3 - Port A Solenoid
2217	Auxiliary Valve 4 - Port B Solenoid
2218	Auxiliary Valve 4 - Port A Solenoid
2219	Auxiliary Valve 5 - Port B Solenoid
2220	Auxiliary Valve 5 - Port A Solenoid
2221	Auxiliary Valve 6 - Port B Solenoid
2222	Auxiliary Valve 6 - Port A Solenoid
2223	Auxiliary Valve 7 - Port B Solenoid
2224	Auxiliary Valve 7 - Port A Solenoid
2252	Machine Articulation Angle Sensor 2
2650	Steering Valve Control Module Power Supply

* The CID is a diagnostic code that indicates which circuit is faulty.

* The MID is a diagnostic code that indicates which electronic control module diagnosed the fault.

Resistor, Sender and Solenoid Specifications - Volume 2			
Part No.	Component Description		Resistance (Ohms)*
7T-4003	Resistor:	Defrost Fan	10 ± 0.5
125-9740	Resistor:	Blower	A-C: 2 ± 0.1 B-C: 1 ± 0.05 C-D: 0.36 ± 0.018
134-2540	Resistor:	Can / AccuGrade Can	120 ± 12

* All room temperature unless otherwise noted.

Failure Mode Identifiers (FMI)*	
FMI No.	Failure Description
0	Data valid but above normal operational range.
1	Data valid but below normal operational range.
2	Data erratic, intermittent, or incorrect.
3	Voltage above normal or shorted high.
4	Voltage below normal or shorted low.
5	Current below normal or open circuit.
6	Current above normal or grounded circuit.
7	Mechanical system not responding properly.
8	Abnormal frequency, pulse width, or period.
9	Abnormal update.
10	Abnormal rate of change.
11	Failure mode not identifiable.
12	Bad device or component.
13	Out of calibration.
14	Parameter failures.
15	Parameter failures.
16	Parameter not available.
17	Module not responding.
18	Sensor supply fault.
19	Condition not met.
20	Parameter failures.

*The FMI is a diagnostic code that indicates what type of failure has occurred.

Wire Description					
Wire Number	Wire Color	Description	Wire Number	Wire Color	Description
Power Circuits			Control Circuits (Continued)		
101	RD	Battery +24V	J769	YL	Right Side Auto/Manual SW (NC)
103	RD	LH Position Lamps Fuse	J771	BU	Left Side Auto/Manual SW (NC)
104	RD	RH Position Lamps Fuse	K722	YL	RT Inc/Dec SW (Dec)
105	RD	Key Switch Fuse	K723	PU	RT Inc/Dec SW (Inc)
106	WH	Cab Work Lamps	K737	BR	Engine Brake Cylinders 1 to 4
108	RD	Dome Lamps	K738	GN	Engine Brake Cylinders 5 & 6
109	RD	Alternator Breaker	K739	BU	Engine Brake Cylinder Common
112	PU	Main Power Relay Output	K748	OR	Secondary Steer Motor Relay
114	RD	Warning Horn (Forward)	K749	WH	Blade Right Lever Pos Sensor
115	RD	Load Breaker	K750	PU	Blade Left Lever Pos Sensor
116	BR	Beacon	K758	BU	Articulation Lever Pos Sensor
117	RD	Main Breaker	K788	GY	Articulation Right Solenoid
118	GY	LH Door Wipers	K789	YL	Articulation Left Solenoid
119	PK	RH Door Wipers	L730	OR	+5V Supply (MSSN Cont)
120	YL	Front / Rear Wipers	L731	BR	5V Return (MSSN Cont)
121	YL	Back Alarm To Lamp	M719	GN	Blade Sideshift Left Pos Sensor
122	BU	Side Wiper	M720	BU	Circle Sideshift Left Solenoid
123	WH	Rear Work Lights	M722	OR	Circle Sideshift Right Solenoid
124	GN	HVAC	N707	PU	Fuel Pressure SW Return
125	RD	Back Light	N787	BU	Hydraulic Filter Bypass Switch Pilot Supply
126	RD	Transmission Control Fuse	N788	PK	Not Used
127	RD	Monitoring	R732	BR	Hydraulic Oil Inlet Temp Sensor
128	PK	Autolube	R736	PK	Park Brake Press SW (NO)
129	RD	Cigar Lighter	R746	PK	Intake Manifold Press Sensor
130	GN	Wiews	R747	GY	Atmospheric Pressure Sensor
132	RD	Condenser Fan #1	T725	WH	Fuel Pressure SW
134	RD	Air Cleaner	U700	WH	Circle Rt Sol
135	RD	Condenser Fan #2	U701	GN	Circle Lt Sol
140	BU	Fast Speed Blower Breaker	U702	GY	Aux Valve 1 Sol B
141	PK	Defrost Fan	U703	YL	Aux Valve 1 Sol A
142	BU	Flasher	U704	PK	Aux Valve 2 Sol B
143	BR	Blade Work Lights	U705	PU	Aux Valve 2 Sol A
144	GN	Seat	U706	BR	Aux Lever 1 Pos Sensor
146	GY	Blade Work Light #2	U707	BU	Aux Lever 2 Pos Sensor
150	RD	Engine Control Fuse	U708	OR	Aux Lever 3 Pos Sensor
152	RD	AccuGrade Fuse	U709	WH	Aux Lever 4 Pos Sensor
155	RD	AWD Control (Not used 14M)	U710	GN	Aux Lever 5 Pos Sensor
156	YL	Sensor Power	U711	GY	Aux Lever 6 Pos Sensor
160	PU	Heated Mirrors	U712	YL	Aux Lever 7 Pos Sensor
165	YL	Differential Lock	U713	PK	Aux Valve 3 Sol B
169	PK	Center Shift / Blade Cushion	U714	PU	Aux Valve 3 Sol A
170	RD	Product Link	U715	BR	Aux Valve 4 Sol B
171	RD	Implement Control #1	U716	BU	Aux Valve 4 Sol A
172	RD	Implement Control #2	U717	OR	Aux Valve 5 Sol B
176	RD	Communication Radio Converter	U718	WH	Aux Valve 5 Sol A
179	RD	Entertainment Radio Converter	U719	GN	Aux Valve 6 Sol B
180	RD	Implement Control Main	U720	GY	Aux Valve 6 Sol A
199	RD	Steering Valve	U723	PU	Fuel Level Sender
Ground Circuits			U724	WH	XMSN Filter Bypass SW
200	BK	Main Chassis	U725	GN	Auto Shift SW (NC)
210	BK	Ent Radio Converter Output (24/12 Volt)	U726	GY	Auto Shift SW (NO)
229	BK	Engine Control Gnd	U727	WH	Inching Pedal (NO)
A201	BK	Not Used	U728	PK	Serv Brake Accum Charge Press Sensor
A202	BK	Trans & Chassis Control	U734	GN	Park Brake SW (OR)
A210	BK	Not Used	U735	GY	Park Brake SW(On)
A250	BK	Cab Gnd	U736	YL	Steering Valve Signal
A274	BK	AccuGrade Gnd	U739	BR	Steering Lever Pos 1
A295	BK	Implement Control Ground	U740	BU	Steering Lever Pos 2
A296	BK	Implement 1 Control Ground	U741	OR	Steering Lever Pos 3
A297	BK	Implement 2 Control Ground	U742	WH	Steer Valve Error Signal
Basic Machine Circuits			U743	GY	Wheel Lean Input Pos Sensor
304	WH	Cranking Motor	U744	OR	Auto Neutral Art Sw (NO)
306	GN	Starter Motor Relay Output	U745	PK	Auto Neutral Art Sw (NC)
307	OR	Key Switch Start	U747	OR	Wheel Lean Sol Left
308	YL	Main Power Relay Coil	U748	GY	Wheel Lean Sol Right
320	OR	Horn Relay Coil To Switch	U749	BR	Blade Sideshift Sol Right
321	BR	Backup Alarm	U750	PK	Blade Sideshift Sol Left
322	GY	Warning Horn (Forward)	U751	WH	Blade Pitch Sol Fwd
365	YL	Fuel Priming Pump Relay	U752	PU	Blade Pitch Sol Reverse
Monitoring Circuits			U753	BR	Sec Steer Request Sig
403	GN	Alternator (r) Term.	U760	PK	Optional Float Ind 1
439	YL	Center Shift Pin Pulled Indicator	U761	PU	Optional Float Ind 4
C461	PU	Park Brake Pressure SW (NC)	U762	GN	Optional Float Ind 6
F421	YL	Fuel Supply Temp	U763	BU	Circle Drive Lever Pos Sensor
G434	BU	Not Used	U764	GY	Blade Pitch Input Pos Sensor
H414	YL	Action Alarm	U765	WH	Circle Sideshift IP Pos Sensor
Accessory Circuits			U766	BR	Op Seat Sw (NO)
500	BR	Wiper - Front (Park)	U767	BU	Op Seat Sw (NC)
501	GN	Wiper - Front (Low)	U768	BU	Art Angle Pos Sensor 2
502	OR	Wiper - Front (Hi)	U769	OR	Aux Valve 7 Sol B
503	BR	Wiper - Rear (Park)	U770	WH	Aux Valve 7 Sol A
504	YL	Wiper - Rear (Low)	X725	GY	Steering Signal To Controller
505	BU	Wiper - Rear (Hi)	X754	GN	Sec Steer Left Solenoid
506	PU	Washer - Front	X755	WH	Sec Steer Right Solenoid
507	WH	Washer - Rear	Y787	YL	PHS Can (+) (Not Used)
508	PU	Radio Speaker - Left	Y788	GN	PHS Can (-) (Not Used)
509	WH	Radio Speaker - Left (Common)	801	PK	Autolube Solenoid & Pump Motor
511	BR	Radio Speaker - Right	843	WH	Not Used
512	GN	Radio Speaker - Right (Common)	844	GN	Not Used
515	GY	Blower Motor (Hi)	849	YL	Not Used
516	GN	Blower Motor (Medium)	850	PU	Not Used
517	BU	Blower Motor (Low)	892	BR	Cat Data Link (-)
518	OR	+24V Flasher Input	893	GN	Cat Data Link (+)
519	PK	Thermostat To Refrigerant Press. SW	A847	YL	Left Blade Down Force Pro Valve
520	WH	Opr A/C SW To Thermostat	A849	OR	Right Blade Down Force Pro Valve
521	YL	A/C SW To Refrigerant SW	A893	OR	Fuel Prime SW To Fuel Prime Pump
522	WH	A/C Clutch To Thermostat SW	F843	YL	Inching Pedal Pos Sensor
523	BR	Wiper - Left (Park)	F846	PU	MSS Status LED
524	BU	Wiper - Left (Low)	G826	WH	Fuel Press Sensor (+5V)
525	GY	Wiper - Left (Hi)	G827	GN	Fuel Press Sensor (Gnd)
526	YL	Wiper - Right (Park)	G828	WH	+5V Supply 1 (Eng Cont)
527	GN	Wiper - Right (Low)	G829	GN	5V Return (Eng Cont)
528	PK	Wiper - Right (Hi)	G833	PK	Temp Sensor Return
529	WH	Washer Left	G856	WH	TDC Service Probe (+)
530	OR	Washer Right	G857	YL	TDC Service Probe (-)
538	BR	Dash Flasher Indicator Output	H803	BU	Proportional Driver Return (9-12) (Imp Cont1)
539	BU	Turn Signal Indicator Right	H807	YL	Load Return 1 (Imp Cont2)
540	WH	Turn Signal Indicator Left	H808	WH	Load Return 1 (Imp Cont2)
556	WH	Differential Lock	H861	PU	Proportional Driver Return (1-4) (Imp Cont)
567	WH	A/C SW To Condenser Fan Relays	H862	GY	Proportional Driver Return (5-8) (Imp Cont)
570	BU	Blade Cushion Sol	H863	BU	Proportional Driver Return (9-12) (Imp Cont)
581	GY	Left Rear Turn Flasher	H864	GN	Not Used
582	PK	Right Rear Turn Flasher	J844	GY	+8 Volt Supply (Eng Cont)
592	BU	Dc/Dc Converter Power Output	K631	GY	LH Down Force Enable Solenoid
593	GN	Condenser Fan Relay To Motors	K632	OR	RH Down Force Enable Solenoid
A504	GN	Rear Defroster Fan (Low)	L854	YL	AccuGrade Can (+)
A507	YL	Rear Defroster Fan (Hi)	L855	GN	AccuGrade Can (-)
A513	PK	Dc/Dc Converter Memory Output	R800	OR	+8V Sensor Power (Imp Cont)
A514	YL	Heated Mirror Power	R818	YL	Transmission Oil Temp Sensor
A524	BR	Temp Potentiometer Pos 2	T858	GY	Injector 1 & 2 High Side
A557	WH	Precleaner Blower +8	T859	WH	Injector 3 & 4 High Side
A572	PK	Comm Converter 12V Output	T860	OR	Injector 5 & 6 High Side
C532	GN	Autolube Pressure Sensor Signal	X800	OR	+8V Sensor Return (XMSN Cont)
C542	GN	Heated Mirror Power	900	PU	XMSN Shift Sol 4
C546	WH	Blower Fast Speed Relay	901	WH	XMSN Shift Sol 6
C558	BU	Condenser Fan 2 Relay Out	902	BR	XMSN Shift Sol 7
C568	WH	Blower Motor (Max)	903	GY	XMSN Shift Sol 8
E529	YL	Power Air Cleaner Relay Coil	921	WH	XMSN Sol Return
E554	PK	A/C Cont To A/C Comp Clutch	922	BR	XMSN Sol Return
Lighting Circuits			925	YL	XMSN Sol Shift 1
603	PK	Rotary Beacon	994	GY	Engine Oil Pressure Sensor
604	OR	Stop Lamp	995	BU	Engine Coolant Temperature
605	YL	Turn Lamp - Left	997	OR	Analog Sensor Power (+ 5V)(Imp Cont)
606	GY	Turn Lamp - Right	998	BR	5V Return (Imp Cont)
607	PK	Blade Floods #2	A975	BU	Differential Lock Relay
609	YL	Snow Wing Lamps	C967	BU	Intake Manifold Air Temp
610	OR	Head Lamp Relay Out	C978	BR	Set Throttle SW (NC)
611	PU	Head Lamp Hi	C979	OR	Resume Throttle SW (NO)
614	PU	Backlight Relay Input	C981	GN	Compression Brake
617	BR	Tail/Position Lamp - Left	C991	PK	Fuel Pressure Sensor
618	YL	Tail/Position Lamp - Right	E900	WH	XMNS Output Spd (-)
619	GN	Head Lamp Lo	E901	GN	XMNS Output Spd (+)
626	BU	Backlight Relay Out	E902	PU	XMNS Intermediate Spd (-)
645	PK	Headlamp Relay Coil	E903	YL	XMNS Intermediate Spd (+)
646	OR	Rear Flood Relay Coil	E904	BR	XMNS Intermediate Spd (-)
647	GN	Blade Flood Relay Coil	E905	BU	XMNS Intermediate Spd (+)
660	PU	Ind Lamp - Auto Shift 1st Gear	E906	OR	XMNS Trans Output Spd (-)
668	BU	Backlight Relay Out	E907	GY	XMNS Trans Output Spd (+)
680	GN	Cab Floodlights Relay Out	E908	BR	XMNS Trans Input Spd (-)
683	PU	Rear Flood Relay Out	E909	WH	XMNS Trans Input Spd (+)
684	OR	Cab Flood Relay Input	E929	GY	Articulation Angle Pos Sensor
685	BR	Blade Floods	E963	BK	Engine Speed Sensor (-)
695	OR	Left Turn Lamp Relay Coil	E964	WH	Engine Speed Sensor (+)
696	GN	Right Turn Lamp Relay Coil	E965	BU	Sec Engine Speed Sensor (-)
A608	GY	Dimmer Relay Coil	E966	YL	Sec Engine Speed Sensor (+)
Control Circuits			E974	GN	Inching Pedal SW (NC)
709	OR	+10V Supply (Imp Cont)	F916	GN	Backup Alarm Relay
727	GN	Sec Steer Test SW	G945	OR	Throttle Sel SW (NO)
751	GN	XMSN Shift Sol 3	G953	BU	Impl Pilot Supply Solenoid
752	YL	XMSN Shift Sol 2	G965	PU	Load Return 2 (Imp Cont)
754	BU	XMSN Shift Sol 1	K900	YL	J1939 Data Link +
755	OR	XMSN Shift Sol 5	K927	BU	PWM Driver Return (5-8) (Imp Cont1)
799	WH	+10V Supply (XMSN Cont)	K952	BR	PWM Driver Return (1-4) (Imp Cont1)

Off-Machine Switch Specification				
Part No.	Function	Actuate	Deactuate	Contact Position
3E-5464	Thermostat	-1.1 ± 0.6°C (30 ± 1.4°F)	2.2 ± 0.8°C (36 ± 1.4°F)	Normally Closed

Component Location - Volume 2 (Cab)					
Component	Schematic Location	Machine Location	Component	Schematic Location	Machine Location
Actuator - Water Valve	A-14	10	Relay - Cab Floodlights	E-5	G
Alarm - Action	H-5	A	Relay - Condenser Fan	B-13	G
Breaker - Fast Speed Blower	B-10	B	Relay - Condenser Fan 2	B-13	G
Cluster - Dash	D-5	A	Relay - Differential Lock	B-5	E
Control - Implement 1	I-9	E	Relay - Dimmer	C-5	E
Control - Implement 2	I-10	E	Relay - Fast Speed	B-14	E
Converter - Communications	F-14	6	Relay - Headlamp	B-5	E
Converter - Entertainment Radio	G-4	G	Resistor - AccuGrade Can	B-8	6
Diode - Rear Flood Interlock	F-5	E	Resistor - Blower	A-14	10
Fuse - Buss (Switched)	C-10	B	Resistor - Can 2	B-8	G
Fuse - Buss (Un-Switched)	D-10	B	Resistor - DC Can 1	D-1	F
Ground - Cab 2	A-10	E	Resistor - DC Can 2	E-5	A
Ground - Cab 3	A-10	E	Resistor - Defrost Fan	E-14	8
Ground - Cab 4	A-10	E	Sensor - Inching Pedal	C-3	A
Ground - Cab Roof	B-15	G	Sensor - Left Blade Down Force	I-14	G
Indicator - Auto Shift Enabled	G-5	A	Sensor - Right Blade Down Force	I-14	G
Indicator - Auxiliary Lever 6 Float	A-2	F	Sensor - Throttle Position	C-3	A
Indicator - CTR Shift Pin Pulled	G-5	A	Switch - A/C On	B-14	G
Joystick - Left Hand	I-1	D	Switch - Auto Shift On/Off	B-2	F
Joystick - Mini	B-1	C	Switch - Blade Cushion	B-2	F
Joystick - Right Hand	C-1	C	Switch - Blade Force	I-14	G
Lamp - Dome	F-14	4	Switch - Brake Light	C-3	A
LED - LH Joystick Illumination	A-14	5	Switch - Brake Pedal	C-3	A
LED - RH Joystick Illumination	B-14	G	Switch - Center Shift Pin	E-1	F
Lever - Auxiliary 5	A-2	F	Switch - Compression Brake	H-5	F
Lever - Auxiliary 7	A-2	F	Switch - Defrost Fan	B-3	F
Messenger	D-1	F	Switch - Differential Lock Floor	C-3	9
Module - Flasher	I-5	E	Switch - Front Wiper	G-14	G
Motor - Blower	A-13	10	Switch - Hazard	F-1	F
Motor - Front Washer	C-13	B	Switch - Head / Tail Lamps	F-1	F
Motor - Front Wiper	F-14	2	Switch - Heated Mirrors	B-2	F
Motor - LH Door	E-13	12	Switch - Horn	G-5	C
Motor - LH Door Washer	C-13	B	Switch - Implement Lockout	D-1	F
Motor - LH Window Washer	C-13	B	Switch - Inching Pedal	C-3	A
Motor - Rear Defroster	E-14	8	Switch - Key	D-4	A
Motor - Rear Washer	C-13	B	Switch - LH Auto / Manual	G-1	D
Motor - Rear Wiper	D-14	6	Switch - LH Door Wiper	H-14	G
Motor - RH Door	E-13	11	Switch - LH Offset	H-1	D
Motor - RH Door Washer	C-13	B	Switch - Operator Present	B-13	1
Motor - RH Window Washer	C-13	B	Switch - Park Brake Up	G-5	A
Panel - HVAC Operator	D-13	G	Switch - Rear Wiper	H-14	G
Pod - Auxiliary Control	B-1	C	Switch - RH Auto / Manual	G-1	C
Port - 12 Volt Auxiliary	B-4	F	Switch - RH Door Wiper	H-14	G
Relay - Heated Mirror	C-5	G	Switch - RH Offset	G-1	C
Relay - Horn	F-5	E	Switch - Secondary Steer Test	B-5	A
Relay - LH Position	C-5	E	Switch - SS Auto / Manual	G-1	C
Relay - Power Air Cleaner	B-13	G	Switch - Thermal	A-13	10
Relay - Rear Flood	E-5	E	Switch - Throttle Lock Mode	E-1	F
Relay - RH Position	C-5	E	Switch - Throttle Set	E-1	F
Relay - Back Light	C-5	G	Switch - Turn Signal	H-5	C
Relay - Blade Flood	E-4	E	Thermostat	A-13	10
Relay - Blade Flood 2	E-5	G			

Check Part Numbers in the Parts Manuals for your Specific Machine.

Machine locations are repeated for components located close together.

A = Located below or inside of dash.

B = Located inside or near fuse panel.

C = Located inside of right console.

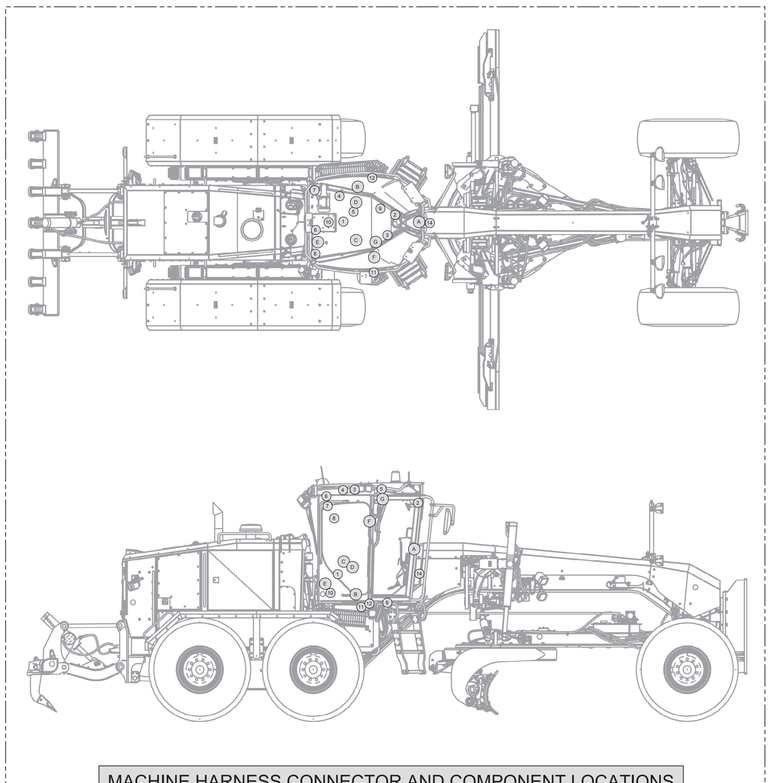
D = Located inside or near left console.

E = Located inside rear cab covered compartment.

F = Located on right hand cab column.

Connector Location - Volume 2		
Connector Number	Schematic Location	Machine Location
CONN 1	A-3	E
CONN 2	D-3	E
CONN 3	D-3	E
CONN 6	G-14	E
CONN 7	A-5	A
CONN 8	A-14	3
CONN 9	A-14	3
CONN 24	F-3	A
CONN 25	H-2	1a
CONN 32	F-3	A
CONN 37	D-15	7
CONN 38	D-14	G
CONN 39	E-14	4
CONN 40	E-14	G
CONN 41	B-14	2
CONN 42	F-14	E
CONN 43	G-14	E
CONN 44	G-14	E
CONN 46	A-13	E
CONN 46	A-13	E
CONN 47	E-13	E
CONN 48	G-13	E
CONN 49 AccuGrade	A-5	E
CONN 50 Service Tool	A-5	B
CONN 51 Air / Heated Seat	A-5	I
CONN 52	14	C
CONN 53	14	D
CONN 54	A-2	F
CONN 55	A-2	F
CONN 56	G-2	C
CONN 57	H-2	C

The connectors shown in this chart are for harness to harness connectors. Connectors that join a harness to a component are generally located at or near the component. See the Component Location Chart.



Event Codes Engine Control	
Event Code	Condition
E096	Fuel Pressure Is High
E172	Inlet Air Is Restricted
E194	Exhaust Temperature Is High
E265	Shutdown (Ground Level)
E360	Oil Pressure Is Low
E361	Coolant Temperature Is High
E362	Engine Overspeeds
E363	Fuel Temperature Is High
E390	Fuel Filter Is Restricted
E441	Idle Speed Is High
E539	Intake Manifold Air Temperature Is High
Transmission / Chassis Control	
Event Code	Condition
0284	Low Brake Pressure
0329	Transmission Filter Plugged
0490	Parking Brake ON
0627	Parking Brake Abuse
0795	Machine Speed Excessive For Machine Articulation Angle
0877	High Transmission Oil Temperature
Implement Control	
Event Code	Condition
0192	Steering System Malfunction
0256	Steering Output Detected In The Wrong Direction
0257	Steering Output Detected With No Command
0258	No Steering Detected With Command Given
0263	Low Main Pump Pressure
0455	Hydraulic Pilot Supply Filter Plugged
0560	Secondary Steer Pump No Response
0562	Steering Lever Has Not Been Aligned To Wheel Steering Angle
0598	Steering Limited Due To Cold Hydraulic Oil
0599	Gear Too High For Steering With Cold Oil
0795	Machine Speed Excessive For Articulation Angle
0796	Machine Articulation Angle Limited Due To Machine Speed
0861	Clock Manual Alignment Required
0878	High Hydraulic Oil Temperature
2085	Invalid Articulation Response Detected

Related Electrical Service Manuals	
Title	Form Number
Alternator: 235-7133	SENR4130
Electric Starting Motor: 207-1556	SENR3581
Engine Control:	RENR9344
Implement Control:	RENR9513
Transmission / Chassis Control:	RENR9004

CATERPILLAR®

RENR9024-09
September 2017

Schematic

16M Motor Grader Electrical System

B9H1-750

Volume 2 of 3: Cab

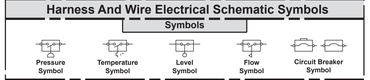
© 2017 Caterpillar, All Rights Reserved

Printed in U.S.A.

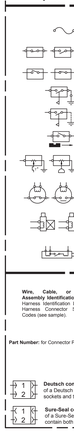
RENR9024-09 VOL 2 of 3
36 Page, (Dimensions: 48 inches x 35 inches)

Harness And Wire Electrical Schematic Symbols

Symbols



Symbols and Definitions



Fuse: A component in an electrical circuit that will open the circuit if too much current flows through it.

Switch (Normally Open): A switch that will close at a specified point (temp, press, etc.). The circle indicates that the component has screw terminals and a wire can be disconnected from it.

Switch (Normally Closed): A switch that will open at a specified point (temp, press, etc.). No circle indicates that the wire cannot be disconnected from the component.

Ground (Wired): This indicates that the component is connected to a grounded wire. The grounded wire is fastened to the machine.

Ground (Case): This indicates that the component does not have a wire connected to ground. It is grounded by being fastened to the machine.

Reed Switch: A switch whose contacts are controlled by a magnet. A magnet closes the contacts of a normally open reed switch. It opens the contacts of a normally clos

RENR9024-09 VOL 2 of 3

36 Page, (Dimensions: 48 inches x 35 inches)

SYMBOL	DESCRIPTION
+	CIRCUIT CONNECTION
⊣⊢	CIRCUIT CONNECTION
⊣⊢	SPLICE CONNECTION
⊣⊢	SPLICE CONNECTION
⊣⊢	CIRCUIT CONNECTION
⊣⊢	CIRCUIT CONNECTION
⊣⊢	CIRCUIT CONNECTION
⊣⊢	CIRCUIT CONNECTION
⊣⊢	CIRCUIT CONNECTION
⊣⊢	CIRCUIT CONNECTION

ABBREV	COLOR
RD	RED
OR	ORANGE
YL	YELLOW
PK	PINK
BK	BLACK
GY	GRAY
TN	TAN
BR	BROWN
GN	GREEN
BU	BLUE

WIRE GROUP COLOR DESCRIPTIONS

- WIRES THAT HAVE EXTRA COLOR STRIPE TELL YOU WHICH CIRCUIT IT IS
- WIRES THAT HAVE EXTRA COLOR STRIPE TELL YOU WHICH CIRCUIT IT IS
- ENGINE CONTROL CIRCUIT
- ENGINE CONTROL CIRCUIT
- ENGINE CONTROL CIRCUIT

CATERPILLAR®

RENR9024-09
September 2017

Schematic

16M Motor Grader
Electrical System

B9H1-750

RENR9024-09 VOL 3 of 3
36 Page, (Dimensions: 48 inches x 35 inches)

Volume 3 of 3: Engine and Chassis

© 2017 Caterpillar, All Rights Reserved

Printed in U.S.A.

Wire Description					
Wire Number	Wire Color	Description	Wire Number	Wire Color	Description
Power Circuits			Control Circuits (Continued)		
101	RD	Battery +24V	J769	YL	Right Side Auto/Manual SW (NC)
103	RD	LH Position Lamps Fuse	J771	BU	Left Side Auto/Manual SW (NC)
104	RD	RH Position Lamps Fuse	K722	YL	RT In/Dec SW (Dec)
105	RD	Key Switch Fuse	K723	PU	RT In/Dec SW (Inc)
106	WH	Cab Work Lamps	K737	BR	Engine Brake Cylinders 1 to 4
108	RD	Dome Lamps	K738	ON	Engine Brake Cylinders 5 & 6
109	RD	Alternator Breaker	K739	BU	Engine Brake Cylinder Common
112	PU	Main Power Relay Output	K748	OR	Secondary Steer Motor Relay
114	RD	Warning Horn (Forward)	K749	WH	Blade Right Lever Pos Sensor
115	RD	Load Breaker	K750	PU	Blade Left Lever Pos Sensor
116	BR	Beacon	K758	BU	Articulation Lever Pos Sensor
117	RD	Main Breaker	K788	GY	Articulation Right Solenoid
118	GY	LH Door Wipers	K789	YL	Articulation Left Solenoid
119	PK	RH Door Wipers	L730	OR	+5V Supply (XMSN Cont)
120	YL	Front / Rear Wipers	L731	BR	5V Return (XMSN Cont)
121	YL	Back Alarm To Lamp	M719	ON	Blade Sideshift Left Pos Sensor
122	BU	Side Wiper	M720	BU	Circle Sideshift Left Solenoid
123	WH	Rear Work Lights	M722	OR	Circle Sideshift Right Solenoid
124	GN	HVAC	N707	PU	Fuel Pressure SW Return
125	RD	Back Light	N787	BU	Hydraulic Filter Bypass Switch Pilot Supply
126	RD	Transmission Control Fuse	N788	PK	Not Used
127	RD	Monitoring	R732	BR	Hydraulic Oil Inlet Temp Sensor
128	PK	Autolube	R736	PK	Park Brake Press SW (NO)
129	RD	Cigar Lighter	R746	PK	Intake Manifold Press Sensor
130	GN	Wavey	R747	GY	Atmospheric Pressure Sensor
132	RD	Condenser Fan #1	T725	WH	Fuel Pressure SW
134	RD	Air Cleaner	U705	WH	Circle Rt Sol
135	RD	Condenser Fan #2	U751	GN	Circle Lt Sol
140	BU	Fast Speed Blower Breaker	U702	GY	Aux Valve 1 Sol B
141	PK	Defrost Fan	U703	YL	Aux Valve 1 Sol A
142	BU	Flasher	U704	PK	Aux Valve 2 Sol B
143	BR	Blade Work Lights	U705	PU	Aux Valve 2 Sol A
144	GN	Seat	U706	BR	Aux Lever 1 Pos Sensor
146	GY	Blade Work Light #2	U707	BU	Aux Lever 2 Pos Sensor
150	RD	Engine Control Fuse	U708	OR	Aux Lever 3 Pos Sensor
152	RD	AccuGrade Fuse	U709	WH	Aux Lever 4 Pos Sensor
155	RD	AWD Control (Not used 14M)	U710	GN	Aux Lever 5 Pos Sensor
156	YL	Sensor Power	U711	GY	Aux Lever 6 Pos Sensor
160	PU	Heated Mirrors	U712	YL	Aux Lever 7 Pos Sensor
165	YL	Differential Lock	U713	PK	Aux Valve 3 Sol B
169	PK	Center Shift / Blade Cushion	U714	PU	Aux Valve 3 Sol A
170	RD	Product Link	U715	BR	Aux Valve 4 Sol B
171	RD	Implement Control #1	U716	BU	Aux Valve 4 Sol A
172	RD	Implement Control #2	U717	OR	Aux Valve 5 Sol B
176	RD	Communication Radio Converter	U718	WH	Aux Valve 5 Sol A
179	RD	Entertainment Radio Converter	U719	GN	Aux Valve 6 Sol B
180	RD	Implement Control Main	U720	GY	Aux Valve 6 Sol A
199	RD	Steering Valve	U723	PU	Fuel Level Sender
Ground Circuits			U724	WH	XMSN Filter Bypass SW
200	BK	Main Chassis	U725	GN	Auto Shift SW (NC)
210	BK	Ent Radio Converter Output (24/12 Volt)	U726	GY	Auto Shift SW (NO)
229	BK	Engine Control Gnd	U727	WH	Inching Pedal (NO)
A201	BK	Not Used	U728	PK	Serv Brake Accum Charge Press Sensor
A202	BK	Trans & Chassis Control	U734	GN	Park Brake SW (Off)
A210	BK	Not Used	U735	GY	Park Brake SW(On)
A350	BK	Cab Gnd	U736	YL	Steering Valve Signal
A274	BK	AccuGrade Gnd	U739	BR	Steering Lever Pos 1
A295	BK	Implement Control Ground	U740	BU	Steering Lever Pos 2
A296	BK	Implement 1 Control Ground	U741	OR	Steering Lever Pos 3
A297	BK	Implement 2 Control Ground	U742	WH	Steer Valve Error Signal
Basic Machine Circuits			U743	GY	Wheel Lean Input Pos Sensor
304	WH	Cranking Motor	U744	OR	Auto Neutral Alt Sw (NO)
306	GN	Starter Motor Relay Output	U745	PK	Auto Neutral Alt Sw (NC)
307	OR	Key Switch Start	U747	OR	Wheel Lean Sol Left
308	YL	Main Power Relay Coil	U748	GY	Wheel Lean Sol Right
320	OR	Horn Relay Coil To Switch	U749	BR	Blade Sideshift Sol Right
321	BR	Backup Alarm	U750	PK	Blade Sideshift Sol Left
322	GY	Warning Horn (Forward)	U751	WH	Blade Pitch Sol Fwd
365	YL	Fuel Priming Pump Relay	U752	PU	Blade Pitch Sol Reverse
Monitoring Circuits			U753	BR	Sec Steer Request Sig
403	GN	Alternator (+) Term	U760	PK	Optional Float Ind 1
439	YL	Center Shift Pin Pulled Indicator	U761	PU	Optional Float Ind 4
C491	PU	Park Brake Pressure SW (NC)	U762	GN	Optional Float Ind 5
F421	YL	Fuel Supply Temp	U763	BU	Circle Drive Lever Pos Sensor
G434	BU	Not Used	U764	GY	Blade Pitch Input Pos Sensor
H414	YL	Action Alarm	U765	WH	Circle Sideshift IP Pos Sensor
Accessory Circuits			U766	BR	Op Seat Sw (NO)
500	BR	Wiper - Front (Park)	U767	BU	Op Seat Sw (NC)
501	GN	Wiper - Front (Low)	U768	BU	Art Angle Pos Sensor 2
502	OR	Wiper - Front (Hi)	U769	OR	Aux Valve 7 Sol B
503	BR	Wiper - Rear (Park)	U770	WH	Aux Valve 7 Sol A
504	YL	Wiper - Rear (Low)	X725	GY	Steering Signal To Controller
505	BU	Wiper - Rear (Hi)	X754	ON	Sec Steer Left Solenoid
506	PU	Washer - Front	X755	WH	Sec Steer Right Solenoid
507	WH	Washer - Rear	Y787	YL	PHS Can (+) (Not Used)
508	PU	Radio Speaker - Left	Y788	ON	PHS Can (-) (Not Used)
509	WH	Radio Speaker - Left (Common)	801	PK	Autolube Solenoid & Pump Motor
511	BR	Radio Speaker - Right	843	WH	Not Used
512	GN	Radio Speaker - Right (Common)	844	GN	Not Used
515	GY	Blower Motor (Hi)	849	YL	Not Used
516	GN	Blower Motor (Medium)	850	PU	Not Used
517	BU	Blower Motor (Low)	892	BR	Cat Data Link (-)
518	OR	+24V Flasher Input	893	GN	Cat Data Link (+)
A514	YL	Temp Compensator for Refrigerant Press. SW	A847	YL	Left Blade Down Force Pro Valve
520	WH	Opr A/C SW To Thermostat	A849	OR	Right Blade Down Force Pro Valve
521	YL	A/C SW To Refrigerant SW	A853	OR	Fuel Prime SW To Fuel Prime Pump
522	WH	A/C Clutch To Thermostat SW	F843	YL	Inching Pedal Pos Sensor
523	BR	Wiper - Left (Park)	F846	PU	MSS Status LED
524	BU	Wiper - Left (Low)	G826	WH	Fuel Press Sensor (+5V)
525	GY	Wiper - Left (Hi)	G827	GN	Fuel Press Sensor (Gnd)
526	YL	Wiper - Right (Park)	G828	WH	+5V Supply 1 (Eng Cont)
527	GN	Wiper - Right (Low)	G829	GN	5V Return (Eng Cont)
528	PK	Wiper - Right (Hi)	G833	PK	Temp Sensor Return
529	WH	Washer Left	G856	WH	TDC Service Probe (+)
530	OR	Washer Right	G857	YL	TDC Service Probe (-)
538	BR	Dash Flasher Indicator Output	H803	BU	Proportional Driver Return (8-12) (Imp Cont1)
539	BU	Turn Signal Indicator Right	H807	YL	Load Return 1 (Imp Cont)
540	WH	Turn Signal Indicator Left	H808	WH	Load Return 1 (Imp Cont2)
556	WH	Differential Lock	H861	PU	Proportional Driver Return (1-4) (Imp Cont)
567	WH	A/C SW To Condenser Fan Relays	H862	GY	Proportional Driver Return (5-8) (Imp Cont)
570	BU	Blade Cushion Sol	H863	BU	Proportional Driver Return (9-12) (Imp Cont)
581	GY	Left Rear Turn Flasher	H864	ON	Not Used
582	PK	Right Rear Turn Flasher	J844	GY	+8 Volt Supply (Eng Cont)
592	BU	DoDc Converter Power Output	K831	GY	LH Down Force Enable Solenoid
593	GN	Condenser Fan Relay To Motors	K832	OR	RH Down Force Enable Solenoid
A504	GN	Rear Defroster Fan (Low)	L854	YL	AccuGrade Can (+)
A507	YL	Rear Defroster Fan (Hi)	L855	GN	AccuGrade Can (-)
A513	PK	DcDc Converter Memory Output	R800	OR	+8V Sensor Power (Imp Cont)
A514	YL	Heated Mirror Power	R818	YL	Transmission Oil Temp Sensor
A524	BR	Temp Potentiometer Pos 2	T858	GY	Injector 1 & 2 High Side
A507	WH	Preheater Blower #8	T859	WH	Injector 3 & 4 High Side
A572	PK	Comm Converter 12V Output	T860	OR	Injector 5 & 6 High Side
C532	GN	Autolube Pressure Sensor Signal	X800	OR	+8V Sensor Return (XMSN Cont)
C542	GN	Heated Mirror Power	900	PU	XMSN Shift Sol 4
C546	WH	Blower Fast Speed Relay	901	WH	XMSN Shift Sol 6
C558	BU	Condenser Fan 2 Relay Out	902	BR	XMSN Shift Sol 7
C568	WH	Blower Motor (Max)	903	GY	XMSN Shift Sol 8
E529	YL	Power Air Cleaner Relay Coil	921	WH	XMSN Sol Return
E554	PK	A/C Cont To A/C Comp Clutch	922	BR	XMSN Sol Return
Lighting Circuits			925	YL	XMSN Sol Shift 1
603	PK	Rotary Beacon	994	GY	Engine Oil Pressure Sensor
604	OR	Stop Lamp	995	BU	Engine Coolant Temperature
605	YL	Turn Lamp - Left	997	OR	Analog Sensor Power (+ 5V)(Imp Cont)
606	GY	Turn Lamp - Right	998	BR	5V Return (Imp Cont)
607	PK	Blade Floods #2	A975	BU	Differential Lock Relay
609	YL	Snow Wing Lamps	C967	BU	Intake Manifold Air Temp.
610	OR	Head Lamp Relay Out	C978	BR	Sel Throttle SW (NC)
611	PU	Head Lamp Hi	C979	OR	Resume Throttle SW (NO)
614	PU	Backlight Relay Input	C981	GN	Compression Brake
617	BR	TailPosition Lamp - Left	C991	PK	Fuel Pressure Sensor
618	YL	TailPosition Lamp - Right	E900	WH	XMNS Output Sol (-)
619	GN	Head Lamp Lo	E901	ON	XMNS Output Sol (+)
626	BU	Backlight Relay Out	E902	PU	XMNS Intermediate Sol (-)
645	PK	Headlamp Relay Coil	E903	YL	XMNS Intermediate Sol (+)
646	OR	Rear Flood Relay Coil	E904	BR	XMNS Intermediate Sol (-)
647	GN	Blade Flood Relay Coil	E905	BU	XMNS Intermediate Sol (+)
660	PU	Ind Lamp - Auto Shift 1st Gear	E906	OR	XMNS Trans Output Sol (-)
668	BU	Backlight Relay Out	E907	GY	XMNS Trans Output Sol (+)
680	GN	Cab Floodlights Relay Out	E908	BR	XMNS Trans Input Sol (-)
683	PU	Rear Flood Relay Out	E909	WH	XMNS Trans Input Sol (+)
684	OR	Cab Flood Relay Input	E929	GY	Articulation Angle Pos Sensor
685	BR	Blade Floods	E963	BK	Engine Speed Sensor (-)
695	OR	Left Turn Lamp Relay Coil	E964	WH	Engine Speed Sensor (+)
696	GN	Right Turn Lamp Relay Coil	E965	BU	Sec Engine Speed Sensor (-)
A608	GY	Dimmer Relay Coil	E966	YL	Sec Engine Speed Sensor (+)
Control Circuits			E974	GN	Inching Pedal SW (NC)
709	OR	+10V Supply (Imp Cont)	F916	GN	Backup Alarm Relay
727	GN	Sec Steer Test SW	G946	OR	Throttle Sel SW (NO)
751	GN	XMSN Shift Sol 3	G953	BU	Impl Pilot Supply Solenoid
752	YL	XMSN Shift Sol 2	G965	PU	Load Return 2 (Imp Cont)
754	BU	XMSN Shift Sol 1	K900	YL	J1939 Data Link +
755	OR	XMSN Shift Sol 5	K927	BU	PWM Driver Return (5-8) (Imp Cont1)
799	WH	+10V Supply (XMSN Cont)	K952	BR	PWM Driver Return (1-4) (Imp Cont1)

Failure Mode Identifiers (FMI)*	
FMI No.	Failure Description
0	Data valid but above normal operational range.
1	Data valid but below normal operational range.
2	Data erratic, intermittent, or incorrect.
3	Voltage above normal or shorted high.
4	Voltage below normal or shorted low.
5	Current below normal or open circuit.
6	Current above normal or grounded circuit.
7	Mechanical system not responding properly.
8	Abnormal frequency, pulse width, or period.
9	Abnormal update.
10	Abnormal rate of change.
11	Failure mode not identifiable.
12	Bad device or component.
13	Out of calibration.
14	Parameter failures.
15	Parameter failures.
16	Parameter not available.
17	Module not responding.
18	Sensor supply fault.
19	Condition not met.
20	Parameter failures.

*The FMI is a diagnostic code that indicates what type of failure has occurred.

Component Identifiers (CID*) Module Identifier (MID*) Electronic Transmission/Chassis Control System (MID No. 027)	
CID	Component
0041	8V DC Sensor Power Supply
0070	Parking Brake Switch
0096	Fuel Level Sensor
0144	Backup Alarm Relay
0168	Electrical System Voltage
0190	Engine Speed Sensor
0247	SAE J1939 Data Link
0248	Cat Data Link
0262	5 Volt Sensor DC Power Supply
0368	Transmission Auto / Manual Switch
0420	Secondary Steering Relay
0444	Starter Motor Relay
0573	Inching Pedal Position Sensor
0585	Transmission Output Speed Sensor 1
0588	Monitoring System Display
0599	Engine ECM
0596	Implement ECM
0615	Machine Articulation Angle Position
0621	Downshift Switch
0622	Upshift Switch
0623	Directional Switch
0627	Park Brake Pressure Switch
0669	Transmission Input Speed Sensor
0673	Transmission Output Speed Sensor 3
0674	Transmission Intermediate Speed Sensor 1
0675	Transmission Intermediate Speed Sensor 2
0681	Parking Brake Solenoid Valve
0967	Machine Application
1326	Location Code
1471	Steering Control Position Sensor 1
1472	Steering Control Position Sensor 2
1473	Steering Control Position Sensor 3
1482	10 Volt Sensor DC Power Supply
1558	Electrical Implement Control 2
2113	Operator Present Switch
2143	Electronic Implement Control 3
2146	Articulation Lever Position Sensor
2147	Automatic Neutral Articulation Switch
2150	Blade Left Lift Lever Position Sensor
2151	Blade Right Lift Lever Position Sensor
2152	Wheel Lean Control Position Sensor
2153	Blade Pitch Control Position Sensor
2154	Blade Sideshift Lever Position Sensor
2155	Circle Drive Lever Position Sensor
2156	Circle Sideshift Control Position Sensor
2160	Blade Left Raise Solenoid Valve
2161	Blade Right Raise Solenoid Valve
2162	Blade Left Lower Solenoid Valve
2163	Blade Right Lower Solenoid Valve
2165	Blade Sideshift Left Solenoid Valve
2166	Blade Sideshift Right Solenoid Valve
2167	Circle Left Solenoid Valve
2168	Circle Right Solenoid Valve
2169	Circle Sideshift Left Solenoid Valve
2170	Circle Sideshift Right Solenoid Valve
2171	Articulation Left Solenoid Valve
2172	Articulation Right Solenoid Valve
2173	Wheel Lean Left Solenoid Valve
2174	Wheel Lean Right Solenoid Valve
2181	Blade Pitch Forward Solenoid Valve
2182	Blade Pitch Backward Solenoid Valve
2200	Left Steering Cylinder Position Sensor
2201	Right Steering Cylinder Position Sensor
2202	Steering Valve Control Module
2203	Steering Valve Control Module Spool Position Sensor
2204	Auxiliary Lever 1 Position Sensor
2205	Auxiliary Lever 2 Position Sensor
2206	Auxiliary Lever 3 Position Sensor
2207	Auxiliary Lever 4 Position Sensor
2208	Auxiliary Lever 5 Position Sensor
2209	Auxiliary Lever 6 Position Sensor
2210	Auxiliary Lever 7 Position Sensor
2211	Auxiliary Valve 1 - Port B Solenoid
2212	Auxiliary Valve 1 - Port A Solenoid
2213	Auxiliary Valve 2 - Port B Solenoid
2214	Auxiliary Valve 2: Port A Solenoid
2215	Auxiliary Valve 3 - Port B Solenoid
2216	Auxiliary Valve 3 - Port A Solenoid
2217	Auxiliary Valve 4 - Port B Solenoid
2218	Auxiliary Valve 4 - Port A Solenoid
2219	Auxiliary Valve 5 - Port B Solenoid
2220	Auxiliary Valve 5 - Port A Solenoid
2221	Auxiliary Valve 6 - Port B Solenoid
2222	Auxiliary Valve 6 - Port A Solenoid
2223	Auxiliary Valve 7 - Port B Solenoid
2224	Auxiliary Valve 7 - Port A Solenoid
2252	Machine Articulation Angle Sensor 2
2650	Steering Valve Control Module Power Supply

* The CID is a diagnostic code that indicates which circuit is faulty.
* The MID is a diagnostic code that indicates which electronic control module diagnosed the fault.

Component Identifiers (CID*) Module Identifier (MID*) Electronic Implement Control 2 (Mid No. 147)	
CID	Component
0041	8 VDC Sensor Power Supply
0168	Electrical System Voltage
0247	SAE J1939 Data Link
0248	Cat Data Link
0262	5 Volt Sensor DC Power Supply
0296	Transmission / Chassis ECM
0358	Implement Pilot Pressure Supply Solenoid
0490	Hydraulic Lockout Switch
0588	Monitoring System Display
0590	Engine Electronic Control Module
0597	Main Hydraulic Pump Discharge Pressure
0600	Hydraulic Oil Temperature Sensor
0615	Machine Articulation Angle Position Sensor
0967	Machine Application
1326	Location Code
1471	Steering Control Position Sensor 1
1472	Steering Control Position Sensor 2
1473	Steering Control Position Sensor 3
1482	10 Volt Sensor DC Power Supply
1558	Electrical Implement Control 2
2113	Operator Present Switch
2143	Electronic Implement Control 3
2146	Articulation Lever Position Sensor
2147	Automatic Neutral Articulation Switch
2150	Blade Left Lift Lever Position Sensor
2151	Blade Right Lift Lever Position Sensor
2152	Wheel Lean Control Position Sensor
2153	Blade Pitch Control Position Sensor
2154	Blade Sideshift Lever Position Sensor
2155	Circle Drive Lever Position Sensor
2156	Circle Sideshift Control Position Sensor
2160	Blade Left Raise Solenoid Valve
2161	Blade Right Raise Solenoid Valve
2162	Blade Left Lower Solenoid Valve
2163	Blade Right Lower Solenoid Valve
2165	Blade Sideshift Left Solenoid Valve
2166	Blade Sideshift Right Solenoid Valve
2167	Circle Left Solenoid Valve
2168	Circle Right Solenoid Valve
2169	Circle Sideshift Left Solenoid Valve
2170	Circle Sideshift Right Solenoid Valve
2171	Articulation Left Solenoid Valve
2172	Articulation Right Solenoid Valve
2173	Wheel Lean Left Solenoid Valve
2174	Wheel Lean Right Solenoid Valve
2181	Blade Pitch Forward Solenoid Valve
2182	Blade Pitch Backward Solenoid Valve
2200	Left Steering Cylinder Position Sensor
2201	Right Steering Cylinder Position Sensor
2202	Steering Valve Control Module
2203	Steering Valve Control Module Spool Position Sensor
2204	Auxiliary Lever 1 Position Sensor
2205	Auxiliary Lever 2 Position Sensor
2206	Auxiliary Lever 3 Position Sensor
2207	Auxiliary Lever 4 Position Sensor
2208	Auxiliary Lever 5 Position Sensor
2209	Auxiliary Lever 6 Position Sensor
2210	Auxiliary Lever 7 Position Sensor
2211	Auxiliary Valve 1 - Port B Solenoid
2212	Auxiliary Valve 1 - Port A Solenoid
2213	Auxiliary Valve 2 - Port B Solenoid
2214	Auxiliary Valve 2: Port A Solenoid
2215	Auxiliary Valve 3 - Port B Solenoid
2216	Auxiliary Valve 3 - Port A Solenoid
2217	Auxiliary Valve 4 - Port B Solenoid
2218	Auxiliary Valve 4 - Port A Solenoid
2219	Auxiliary Valve 5 - Port B Solenoid
2220	Auxiliary Valve 5 - Port A Solenoid
2221	Auxiliary Valve 6 - Port B Solenoid
2222	Auxiliary Valve 6 - Port A Solenoid
2223	Auxiliary Valve 7 - Port B Solenoid
2224	Auxiliary Valve 7 - Port A Solenoid
2252	Machine Articulation Angle Sensor 2
2650	Steering Valve Control Module Power Supply

Component Location - Volume 3 (Engine and Chassis)					
Component	Schematic Location	Machine Location	Component	Schematic Location	Machine Location
Alarm - Backup	H-9	55	Sensor - Atmospheric Pressure	F-6	71
Alternator	C-8	65	Sensor - Engine Oil Pressure	F-6	73
Battery 1	H-3	48	Sensor - Engine Speed (Cam)	E-6	70
Battery 2	H-2	48	Sensor - Engine Speed (Crank)	E-6	69
Block - Power	H-2	H	Sensor - Fuel Pressure	F-5	51
Block - Relay & Fuse	G-2	H	Sensor - Fuel Temperature	F-5	51
Breaker - Alternator	E-1	H	Sensor - Hydraulic Oil Cooler Inlet Temp.	H-9	55
Breaker - Load	H-4	H	Sensor - Inlet Air Pressure	D-8	78
Breaker - Main	H-4	H	Sensor - Intake Manifold Air Pressure	E-6	75
Buss - Bar 1 (Breakers)	H-4	H	Sensor - Main Hydraulic Pump Discharge	C-9	61
Control - Engine ECM	I-8	66	Sensor - Service Brake Accumulator Press	H-10	48
Control - Transmission & Chassis	I-13	T	Sensor - Transmission Input Speed	I-14	80
Diode - Differential Lock Solenoid	E-10	47	Sensor - Transmission Int Speed 1	H-14	80
Diode - Starter	F-1	H	Sensor - Transmission Int Speed 2	H-14	80
Fuse - AccuGrade	G-1	H	Sensor - Transmission Oil Temperature	G-15	T
Fuse - Autolube	G-15	H	Sensor - Transmission Out Speed 1	H-14	46
Fuse - Engine Control	E-1	H	Sensor - Transmission Out Speed 2	H-14	46
Fuse - Key Switch	F-2	H	Solenoid - A/C Clutch	D-8	65
Fuse - LH Position Lamps	F-2	H	Solenoid - Attachment Brakes 1 thru 6	C-4	68
Fuse - RH Position Lamps	F-2	H	Solenoid - Attachment Injectors 1 thru 6	B-4	68
Fuse - Transmission Control	F-2	H	Solenoid - Cylinder 1 thru 6 Injectors	D-4	68
Ground - Engine Block	C-8	66	Solenoid - Differential Lock	E-10	47
Ground - Frame	B-8	62	Solenoid - Ether Aid	G-7	52
Ground - Frame (Service Center)	H-3	61	Solenoid - Fan Control	H-10	48
Ground - Rear Frame	E-13	62	Solenoid - Implement Pilot Supply	C-9	61
Ground - Rear Frame 2	E-13	62	Solenoid - Park Brake	G-15	47
Ground - Secondary Steer Engine Block	I-5	53	Solenoid - Transmission 1	H-15	T
Lug - Alternator Isolation	I-4	H	Solenoid - Transmission 2 (Fwd Low)	I-15	T
Lug - Battery	H-1	H	Solenoid - Transmission 3 (Reverse)	I-15	T
Motor - Condenser Fan 1	E-12	95	Solenoid - Transmission 4 (2nd)	I-15	T
Motor - Condenser Fan 2	D-12	95	Solenoid - Transmission 5 (3rd)	H-15	T
Motor - Cranking	E-8	50	Solenoid - Transmission 6 (1st)	H-15	T
Motor - Fuel Priming Pump	H-5	51	Solenoid - Transmission 7 (Low Range)	I-15	T
Motor - Secondary Steer	I-5	53	Solenoid - Transmission 8 (High Range)	I-15	T
Relay - A/C Clutch	F-2	H	Suppressor - A/C Diode	D-8	65
Relay - Autolube	G-2	H	Suppressor - Secondary Steer Diode	I-4	64
Relay - Backup Alarm	F-2	H	Switch - A/C Hi/Low Pressure	D-8	65
Relay - Fuel Pump	E-2	H	Switch - A/C Low Pressure	D-8	65
Relay - Main	H-2	H	Switch - Disconnect	H-3	61
Relay - Secondary Steer	G-2	H	Switch - Engine Coolant Temperature	E-6	72
Relay - Secondary Steer Motor	I-5	53	Switch - Fuel Pressure	F-5	51
Relay - Starter Motor	I-2	H	Switch - Ground Level Shutdown	G-9	60
Resistor - A/C Thermostat Pull-Down	F-10	65	Switch - Hydraulic Pilot Supply Filter By-Pass	G-10	46
Resistor - Can 1	G-10	50	Switch - Intake Manifold Air Temperature	E-6	74
Sender - Fuel Level	C-9	97	Switch - Parking Brake Pressure	H-15	47
Sensor - Articulation Angle C1 Position	A-12	64	Switch - Transmission Filter Bypass	H-14	46
Sensor - Articulation Angle Position	A-12	64			

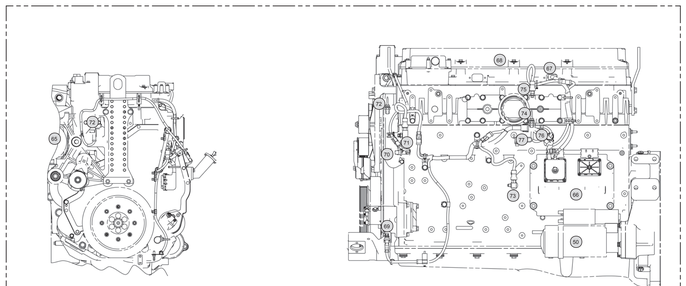
Check Part Numbers in the Parts Manuals for your Specific Machine
Machine locations are repeated for components located close together.
E = Located inside of Rear Cab Covered Compartment.
H = Located inside of Service Center.
T = Located on the transmission control valve .

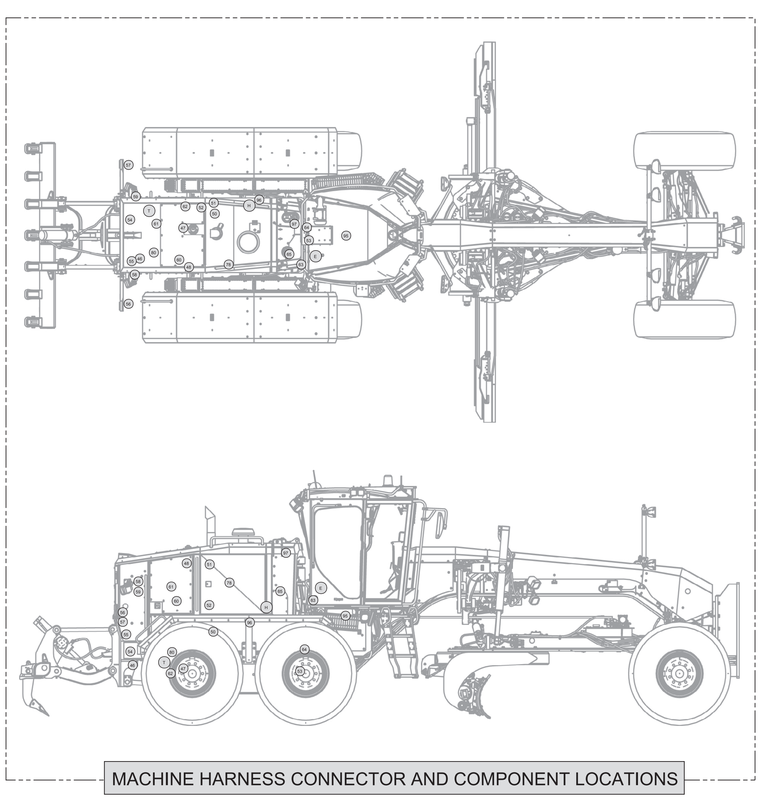
Connector Location - Volume 3		
Connector Number	Schematic Location	Machine Location
CONN 42	A-15	96
CONN 47	B-15	96
CONN 48	D-15	96
CONN 58	E-15	58
CONN 59	F-15	58
CONN 60	E-15	56
CONN 61	F-15	56
CONN 63	F-15	57
CONN 64	F-15	57
CONN 65	G-15	59
CONN 66	G-15	59
CONN 67	A-14	54
CONN 68	H-13	54
CONN 69	I-13	54
CONN 70	G-13	54
CONN 71	A-12	E
CONN 72	C-12	E
CONN 73	D-12	E
CONN 74	A-10, I-1	H
CONN 75 Snow Wing Lamp	A-10	63
CONN 76	C-10	96
CONN 77	D-10	65
CONN 78	D-9 , C-6	68
CONN 79 TDC Service Probe	E-6	76
CONN 80	F-6	77
CONN 81	I-6	96
CONN 82	G-4	H

The connectors shown in this chart are for harness to harness connectors. Connectors that join a harness to a component are generally located at or near the component. See the Component Location Chart.

Event Codes Engine Control	
Event Code	Condition
E096	Fuel Pressure Is High
E172	Inlet Air Is Restricted
E194	Exhaust Temperature Is High
E265	Shutdown (Ground Level)
E360	Oil Pressure Is Low
E361	Coolant Temperature Is High
E362	Engine Overspeeds
E363	Fuel Temperature Is High
E390	Fuel Filter Is Restricted
E441	Idle Speed Is High
E539	Intake Manifold Air Temperature Is High
Transmission / Chassis Control	
Event Code	Condition
0284	Low Brake Pressure
0329	Transmission Filter Plugged
0490	Parking Brake ON
0627	Parking Brake Abuse
0795	Machine Speed Excessive For Machine Articulation Angle
0877	High Transmission Oil Temperature
Implement Control	
Event Code	Condition
0192	Steering System Malfunction
0256	Steering Output Detected In The Wrong Direction
0257	Steering Output Detected With No Command
0258	No Steering Detected With Command Given
0263	Low Main Pump Pressure
0455	Hydraulic Pilot Supply Filter Plugged
0560	Secondary Steer Pump No Response
0562	Steering Lever Has Not Been Aligned To Wheel Steering Angle
0598	Steering Limited Due To Cold Hydraulic Oil
0599	Gear Too High For Steering With Cold Oil
0795	Machine Speed Excessive For Articulation Angle
0796	Machine Articulation Angle Limited Due To Machine Speed
0861	Clock Manual Alignment Required
0878	High Hydraulic Oil Temperature
2085	Invalid Articulation Response Detected

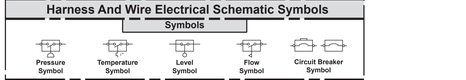
Related Electrical Service Manuals	
Title	Form Number
Alternator: 235-7133	SENR4130
Electric Starting Motor: 207-1556	SENR2881
Engine Control:	RENR9344
Implement Control:	RENR9013
Transmission / Chassis Control:	RENR9004



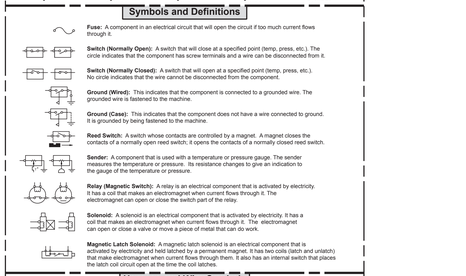


Harness And Wire Electrical Schematic Symbols

Symbols



Symbols and Definitions



Fuse: A component in an electrical circuit that will open the circuit if too much current flows through it.

Switch (Normally Open): A switch that will close at a specified point (temp, press, etc.). The circle indicates that the component has screw terminals and a wire can be disconnected from it.

Switch (Normally Closed): A switch that will open at a specified point (temp, press, etc.). No circle indicates that the wire cannot be disconnected from the component.

Ground (Wired): This indicates that the component is connected to a grounded wire. The grounded wire is fastened to the machine.

Ground (Case): This indicates that the component does not have a wire connected to ground. It is grounded by being fastened to the machine.

Reed Switch: A switch whose contacts are controlled by a magnet. A magnet closes the contacts of a normally

RENR9024-09 VOL 3 of 3

36 Page, (Dimensions: 48 inches x 35 inches)

